STATE OF ILLINOIS)
SS.
COUNTY OF KANE)

RESOLUTION NO. 26-494

APPROVING A CONTRACT FOR CONSTRUCTION WITH HERLIHY MID-CONTINENT COMPANY OF ROMEOVILLE, ILLINOIS FOR THE RANDALL ROAD AT CLAUDE HANSON BRIDGE JOINT REPLACEMENT AND THIN LIFT EPOXY OVERLAY PROJECT, KANE COUNTY SECTION NO. 26-00176-06-BR

WHEREAS, the Kane County Division of Transportation has solicited and received bids for the work described as:

KANE COUNTY SECTION NO. 26-00176-06-BR
RANDALL ROAD AT CLAUDE HANSON BRIDGE JOINT REPLACEMENT AND THIN LIFT EPOXY OVERLAY PROJECT
(hereinafter the "Project")

WHEREAS, the lowest responsible bidder for the Project is:

HERLIHY MID-CONTINENT COMPANY OF ROMEOVILLE, ILLINOIS
With a low bid of
$1,022,000.00

WHEREAS, the County deems it prudent to include in its estimated Project cost a Ten Percent (10%) contingency amounting to One Hundred Two Thousand Two Hundred and 00/100 Dollars ($102,200.00) to cover any unforeseen added costs.

NOW, THEREFORE, BE IT RESOLVED by the Kane County Board that a contract for the Project described hereinabove shall be awarded to the lowest bidder, Herlihy Mid-Continent Company of Romeoville, Illinois in the amount as indicated hereinabove and that the County Board Chairman is hereby authorized and directed to execute a contract and contractor's bond therefor.

BE IT FURTHER RESOLVED by the Kane County Board that there is hereby appropriated the sum of One Million One Hundred Twenty-Four Thousand Two Hundred and 00/100 Dollars ($1,124,200.00) from Transportation Sales Tax Fund #305, Line Item #73010 (Bridge Construction) to pay for the Project.

Line Item: 305.520.527.73010
Line Item Description: Bridge Construction
Was Personnel/Item/Service approved in original budget or a subsequent budget revision? Yes
Are funds currently available for this Personnel/Item/Service in the specific line item? Yes
If funds are not currently available in the specified line item, where are the funds available? N/A

Passed by the Kane County Board on October 13, 2026.

John A. Cunningham, MBA, JD, JD
Clerk, County Board
Kane County, Illinois

Corinne M. Pierog MA, MBA
Chairman, County Board
Kane County, Illinois

Vote:

PASSED

APPROVED

Illinois Department of Transportation

Local Public Agency Formal Contract

P.O. #2026-2300

Contractor's Name: Herlihy Mid-Continent Company

Contractor's Address: 1306 Marquette Drive | City: Romeoville | State: IL | Zip Code: 60446

STATE OF ILLINOIS

Local Public Agency: County of Kane | County: Kane | Section Number: 26-00176-06-BR

Street Name/Road Name: Randall Road | Type of Funds: Non-MFT

☐ CONTRACT BOND (when required)

For a County and Road District Project

Submitted/Approved

Highway Commissioner Signature | Date

Submitted/Approved

County Engineer/Superintendent of Highways | Date: 10-21-2026

For a Municipal Project

Submitted/Approved/Passed

Signature | Date

Official Title

Department of Transportation

☐ Concurrence in approval of award

Regional Engineer Signature | Date

Local Public Agency	County	Section Number	Route(s) (Street/Road Name)
Kane County Division of Transpo	Kane	26-00176-06-BR	Randall Road over UPRR, CPK

NOTICE TO BIDDERS

Sealed proposals for the project described below will be received at the office of BidNet Direct (Name of Office)

https://www.bidnetdirect.com/Illinois/kanecounty (Address) until 9:00 AM (Time) on 08/18/26 (Date).

Sealed proposals will be opened and read publicly at the office of BidNet Direct (Name of Office)

https://www.bidnetdirect.com/Illinois/kanecounty (Address) at 9:00 AM (Time) on 08/18/26 (Date).

DESCRIPTION OF WORK

Location	Project Length
Randall Road over UPRR, CPKC & Tyler Creek (SN 045-3115)	2,525 Ft.

Proposed Improvement

Expansion joint replacement and new bridge deck thin polymer overlay.

1. Plans and proposal forms will be available in the office of

https://www.bidnetdirect.com/Illinois/kanecounty
Bidders must register as Vendors in Bidnet to access and submit Bid Packet materials. There is no charge to register.
Contact: Ms. Calley McPherson at McPhersonCalley@co.kane.il.us (No Charge for Proposal)

2. ☒ Prequalification

   If checked, the 2 apparent as read low bidders must file within 24 hours after the letting an "Affidavit of Availability" (Form BC 57) in triplicate, showing all uncompleted contracts awarded to them and all low bids pending award for Federal, State, County, Municipal and private work. One original shall be filed with the Awarding Authority and two originals with the IDOT District Office.

3. The Awarding Authority reserves the right to waive technicalities and to reject any or all proposals as provided in BLRS Special Provision for Bidding Requirements and Conditions for Contract Proposals.

4. The following BLR Forms shall be returned by the bidder to the Awarding Authority:
   a. Local Public Agency Formal Contract Proposal (BLR 12200)
   b. Schedule of Prices (BLR 12201)
   c. Proposal Bid Bond (BLR 12230) (if applicable)
   d. Apprenticeship or Training Program Certification (BLR 12325) (do not use for project with Federal funds.)
   e. Affidavit of Illinois Business Office (BLR 12326) (do not use for project with Federal funds)

5. The quantities appearing in the bid schedule are approximate and are prepared for the comparison of bids. Payment to the Contractor will be made only for the actual quantities of work performed and accepted or materials furnished according to the contract. The scheduled quantities of work to be done and materials to be furnished may be increased, decreased or omitted as hereinafter provided.

6. Submission of a bid shall be conclusive assurance and warranty the bidder has examined the plans and understands all requirements for the performance of work. The bidder will be responsible for all errors in the proposal resulting from failure or neglect to conduct an in depth examination. The Awarding Authority will, in no case, be responsible for any costs, expenses, losses or changes in anticipated profits resulting from such failure or neglect of the bidder.

7. The bidder shall take no advantage of any error or omission in the proposal and advertised contract.

8. If a special envelope is supplied by the Awarding Authority, each proposal should be submitted in that envelope furnished by the Awarding Agency and the blank spaces on the envelope shall be filled in correctly to clearly indicate its contents. When an envelope other than the special one furnished by the Awarding Authority is used, it shall be marked to clearly indicate its contents. When sent by mail, the sealed proposal shall be addressed to the Awarding Authority at the address and in care of the official in whose office the bids are to be received. All proposals shall be filed prior to the time and at the place specified in the Notice to Bidders. Proposals received after the time specified will be returned to the bidder unopened.

9. Permission will be given to a bidder to withdraw a proposal if the bidder makes the request in writing or in person before the time for opening proposals.

Local Public Agency	County	Section Number	Route(s) (Street/Road Name)
Kane County Division of Transpo	Kane	26-00176-06-BR	Randall Road over UPRR, CPK

PROPOSAL

1. Proposal of Herlihy Mid-Continent Company
Contractor's Name

1306 Marquette Dr, Romeoville IL 60446
Contractor's Address

2. The plans for the proposed work are those prepared by HR Green, Inc.
and approved by the Department of Transportation on Aug 5, 2026.

3. The specifications referred to herein are those prepared by the Department of Transportation and designated as "Standard Specifications for Road and Bridge Construction" and the " Supplemental Specifications and Recurring Special Provisions" thereto, adopted and in effect on the date of invitation for bids.

4. The undersigned agrees to accept, as part of the contract, the applicable Special Provisions indicated on the "Check Sheet for Recurring Special Provisions" contained in this proposal.

5. The undersigned agrees to complete the work within _____ working days or by 11/25/26 unless additional time is granted in accordance with the specifications.

6. The successful bidder at the time of execution of the contract will be required to deposit a contract bond for the full amount of the award. When a contract bond is not required, the proposal guaranty check will be held in lieu thereof. If this proposal is accepted and the undersigned fails to execute a contract and contract bond as required, it is hereby agreed that the Bid Bond of check shall be forfeited to the Awarding Authority.

7. Each pay item should have a unit price and a total price. If no total price is shown or if there is a discrepancy between the products of the unit price multiplied by the quantity, the unit price shall govern. If a unit price is omitted, the total price will be divided by the quantity in order to establish a unit price. A bid may be declared unacceptable if neither a unit price nor a total price is shown.

8. The undersigned submits herewith the schedule of prices on BLR 12201 covering the work to be performed under this contract.

9. The undersigned further agrees that if awarded the contract for the sections contained in the combinations on BLR 12201, the work shall be in accordance with the requirements of each individual proposal for the multiple bid specified in the Schedule for Multiple Bids below.

10. A proposal guaranty in the proper amount, as specified in BLRS Special Provision for Bidding Requirements and Conditions for Contract Proposals, will be required. Bid Bonds will be allowed as a proposal guaranty. Accompanying this proposal is either a bid bond, if allowed, on Department form BLR 12230 or a proposal guaranty check, complying with the specifications, made payable to: County Treasurer of Kane.
The amount of the check is _____ (_____).

Attach Cashier's Check or Certified Check Here

In the event that one proposal guaranty check is intended to cover two or more bid proposals, the amount must be equal to the sum of the proposal guaranties which would be required for each individual bid proposal. If the proposal guaranty check is placed in another bid proposal, state below where it may be found.

The proposal guaranty check will be found in the bid proposal for: Section Number 26-00176-06-BR .

Local Public Agency	Local Street/Road Name	County	Section Number
County of Kane	Randall Road	Kane	26-00176-06-BR

1. THIS AGREEMENT, made and concluded the 13th (Day) day of October 2026 (Month and Year) between the County (Local Public Agency Type) of Kane (Local Public Agency), known as the party of the first part, and Herlihy Mid-Continent Company (Contractor), its successor, and assigns, known as the party of the second part.

2. For and in consideration of the payments and agreements mentioned in the Proposal hereto attached, to be made and performed by the party of the first part, and according to the terms expressed in the Bond referring this contract, the party of the second part agrees with said party of the first part, at its own proper cost and expense, to do all the work, furnish all materials and all labor necessary to complete the work in accordance with the plans and specifications hereinafter described, and in full compliance with all of the terms of this contract.

3. It is also understood and agreed that the LPA Formal Contract Proposal, Special Provisions, Affidavit of Illinois Business Office, Apprenticeship or Training Program Certification, and Contract Bond hereto attached, and the Plans for Section 26-00176-06-BR (Section Number) in County of Kane (Local Public Agency), approved by the Illinois Department of Transportation on _____ (Date), are essential documents of this contract and are a part hereof.

4. IN WITNESS WHEREOF, the said parties have executed this contract on the date above mentioned.

Attest: The County (Local Public Agency Type) of Kane (Name of Local Public Agency)

Clerk — Date: 10/19/26

(SEAL)

(SEAL)

Attest:
Secretary — Date: 10/13/26
John O'Brien, Secretary

(SEAL)

Party of the First Part — Date: 10/15/26

By:

(If a Corporation)

Corporate Name: Herlihy Mid-Continent Company

President, Party of the Second Part — Date: 10/13/26

By:

Douglass D. Schultz, President

(If a Limited Liability Corporation)

LLC Name

By: Manager or Authorized Member, Party of the Second Part

(If a Partnership)

Partner — Date

Partner — Date

Partners doing Business under the firm name of

Party of the Second Part

(If an individual)

Party of the Second Part — Date

TABLE OF CONTENTS

SPECIAL PROVISIONS:

LOCATION OF PROJECT 3

DESCRIPTION OF PROJECT 3

AUTOMATIC CLEARING HOUSE (ACH) 3

BIDDING PROCESS AND AWARD OF CONTRACT (COUNTY) 3

BIDDING REQUIREMENTS AND CONDITIONS FOR CONTRACT PROPOSALS 4

START AND COMPLETION DATE 9

PROSECUTION OF WORK 9

ADDITION, DELETION AND/OR REDUCTION OF PLAN QUANTITIES (COUNTY) 9

CONTRACTOR'S DAILY NOTIFICATION 9

LOCATION COMPLETION 10

CLEAN CONSTRUCTION OR DEMOLITION DEBRIS 10

COOPERATION BY CONTRACTOR 10

SPECIAL PROVISION FOR INSURANCE (COUNTY) 11

CONTRACTOR DISCLOSURE ACKNOWLEDGEMENT 11

PREVAILING WAGES 12

BID PROTEST 13

TRAFFIC CONTROL AND PROTECTION 13

FIELD MEASUREMENTS 14

MAINTENANCE OF ROADWAYS / TRAFFIC CONTROL DEFICIENCY 15

MATERIAL TESTING DAILY NOTIFICATION (COUNTY) 15

EQUIPMENT PARKING AND STORAGE 16

PREQUALIFICATION OF BIDDERS 16

CONTRACTOR WORKING HOURS 16

AVAILABLE REPORTS 17

PUBLIC CONVENIENCE AND SAFETY (D-1) 17

BRIDGE DECK THIN POLYMER OVERLAY 18

WASHOUT BASIN 23

CONTRACTORS DAILY NOTIFICATION 25

BARRICADES, TYPE II (SPECIAL) 25

PROGRESS SCHEDULE 25

REMOVE EXISTING SIGNS 25

IDOT DISTRICT ONE CHECKLIST:

Index For Supplemental Specifications And Recurring Special Provisions
Check Sheet for Recurring Special Provisions
Check Sheet for Recurring Local Roads And Streets Special Provisions

BDE SPECIAL PROVISIONS:

BDE Special Provision Checklist
Construction Air Quality – Diesel Retrofit
Vehicle and Equipment Warning Lights
Work Zone Traffic Control Devices

BLR SPECIAL PROVISIONS:

LR 109-3 – Fuel Cost Adjustment
LR 109-4 – Steel Cost Adjustment
LR 702 – Construction and Maintenance Signs

CONTRACT DOCUMENTS:

BLR 12230	Local Public Agency Proposal Bid Bond
BLR 12325	Apprenticeship or Training Program Certification
BLR 12326	Affidavit of Illinois Business Office
BC 57	Affidavit of Availability
BC 261	Substance Abuse Prevention Program Certification

ADDITIONAL INFORMATION:

IDOT Highway Standards

SPECIAL PROVISIONS

The following Special Provisions supplement the Illinois Department of Transportation's (IDOT) "Standard Specifications for Road and Bridge Construction," adopted January 1, 2022, (hereinafter referred to as the "Standard Specifications"); the IDOT "Highway Standards" adopted January 1, 2026; the "Manual on Uniform Traffic Control Devices for Streets and Highways"; the "Manual of Test Procedures of Materials", in effect on the date of invitation for bids; the "Supplemental Specifications and Recurring Special Provisions," latest edition as indicated on the Check Sheet included herein, which apply to govern the repairs of the bridge carrying Randall Road over UP, CPKC, IC&E Railroads, and Tyler Creek, and in case of conflict with any part or parts of said Specifications, the said Special Provisions shall take precedence and shall govern.

Route: Randall Road (Hanson Bridge)
County: Kane
Section: 26-00176-06-BR

LOCATION OF PROJECT

The project is located at Randall Road over UPRR, CPKC & Tyler Creek and between Royal Boulevard and Big Timber Road in Kane County, Illinois.

DESCRIPTION OF PROJECT

The work consists of removal of the silicone expansion joints and replacement with new preformed joint strip seal joints, bridge deck scarification and new thin polymer overlay, maintenance of traffic, and all incidental and collateral work necessary to complete the project as shown on the plans and as described herein.

AUTOMATIC CLEARING HOUSE (ACH)

Created on: 1/7/2021

The Contractor shall use the County of Kane's Automatic Clearing House (ACH) payment program.

BIDDING PROCESS AND AWARD OF CONTRACT (COUNTY)

Updated: 12/27/2023
The bidding documents for this project are only available online via BidNet at:
https://www.bidnetdirect.com/illinois/kanecounty

Bidders must register as Vendors in BidNet to access Bid Packet materials. There is no charge to register. Follow the link in the paragraph above and click "Vendor Registration" in the upper right corner of the page. Enter your company information, and when prompted, select the "Limited Access" option. If you have questions or problems while registering, please call the BidNet Support Team at 800-835-4603 for direct assistance.

If bid packet and/or bid document addendums are necessary, they will be posted on the BidNet website listed above in this section. **It is the Contractors or subcontractors responsibility to continuously verify if any addendums have been issued by the Kane County Division of Transportation (KDOT) via the BidNet system.**

Electronic submittal of all bid packet proposal items and Responsible Bidders Ordinance (RBO) bid submission requirements are required. If you have questions or problems while submitting bid packet

proposal items, please call the BidNet Support Team at 800-835-4603 for direct assistance.

Construction prequalification and Responsible Bidder Representations forms will be verified prior to notification of the bid opening results. It is the Contractors and/or subcontractors responsibility to ensure all prequalification requirements and forms which are called out in the contract and/or other bid documents are met. The Contractor prequalification letter must be submitted electronically with the bid packet proposal items; however prequalification letters will be accepted up to 24 hours after the bid opening.

More information pertaining to the Responsible Bidders Ordinance (RBO), adopted May 6th, 2024 as resolution 23-340, can be found on KDOT's website at:
http://kdot.countyofkane.org/Pages/Purchasing-Bids.aspx

Note: The entire bid packet does not need to be submitted for the letting. Only the following applicable completed paperwork needs to be submitted for the letting:

- ***Completed 'Schedule of Prices' (BLR 12201) – The unit prices must be entered directly into BidNet. The paper form is not required.***
- ***Certified Local Agency Proposal Bid Bond (BLR 12230) and/or certified check***
- ***Pre-qualification certification letter(s)***
- ***Affidavit of Availability (BC 57), with current work on hand***
- ***Affidavit of Illinois Business Office (BLR 12326), do not use for project with Federal funds***
- ***Apprenticeship or Training Program Certification (BLR 12325), do not use for project with Federal funds***
- ***Responsible Bidder Representations forms***
- ***Contractor Certifications (BLR 12200)***
- ***Substance Abuse Prevention Program Certification (BC 261)***
- ***Prevailing Wage Rate documentation (may be submitted within 48-hours of bid)***
- ***Financial and Familial Disclosures (may be submitted within 48-hours of bid)***

If the bidder chooses to provide a certified check (as opposed to the Certified Local Agency Proposal Bid Bond) as part of the bid submittal, the certified check must be delivered to the Kane County Division of Transportation (41W011 Burlington Rd, St. Charles, IL 60175) prior to the bid opening closing date and time.

The award of this contract will be made to the lowest responsible, qualified bidder. The County reserves the right to reject any or all non-conforming, non-responsive, unbalanced, or conditioned bids, and to reject the bid of any bidder if the County believes that it would be in the best interest of the County not to award to that bidder or to reject any/all bids for any reason. The County also has the right to award this contract with the deletion or reduction of any item(s) in its entirety or partially without claim by the Contractor for loss of profit or overhead.

BIDDING REQUIREMENTS AND CONDITIONS FOR CONTRACT PROPOSALS

Updated: 12/27/2023
Replace Article 102.01 of the Standard Specifications with the following:

"Prequalification of Bidders. When prequalification is required and the Awarding Authority for contract construction work is the County Board of a County, the Council, the City Council, or the President and Board of Trustees of a city, village, town or township, each prospective bidder, in evidence of competence, shall furnish the Awarding Authority a certified or photostatic copy of a "Certificate of Eligibility" issued by the Department of Transportation, according to the Department's "Prequalification Manual". Additionally, evidence of participation in apprenticeship training programs applicable to the work to be performed on the project, which are approved by and registered with the United States Department of Labor's Office of Apprenticeship, or its successor organization; and evidence that any applicable apprenticeship program has graduated at least five (5) apprentices in each of the past five (5) years for each of the construction

crafts the bidder will perform on the project. (Evidence of graduation rates are not required for apprentice able crafts dedicated exclusively to the transportation of material and equipment to and from the Public Works project.)

The two low bidders must file, within 24 hours after the letting, a sworn affidavit showing all uncompleted contracts awarded to them and all low bids pending award for Federal, State, County, Municipal and private work, using the blank form made available for this affidavit.

Issuance of Low Bidder Awarded Contract

Disqualifying Actions to Proposal for Work. The Awarding Authority reserves the right to refuse to open a bid for work, from any bidders, for any of the following reasons:

(a) Lack of competency and adequate machinery, plant, and other equipment, as revealed by the financial statement and experience questionnaires required in the prequalification procedures.

(b) Uncompleted work which, in the judgment of the Awarding Authority, might hinder or prevent the prompt completion of additional work awarded.

(c) False information provided on a bidder's "Affidavit of Availability".

(d) Failure to pay, or satisfactorily settle, all bills due for labor and material on former contracts in force at the time of issuance of proposal forms.

(e) Failure to comply with any prequalification regulations of the contract and the Responsible Bidders Ordinance (RBO) bid submission requirements.

(f) Default under previous contracts.

(g) Unsatisfactory performance record as shown by past work for the Awarding Authority, judged from the standpoint of workmanship and progress.

(h) When the Contractor is suspended from eligibility to bid at a public letting where the contract is awarded by, or requires approval of, the Awarding Authority.

(i) When any agent, servant, or employee of the prospective bidder currently serves as a member, employee, or agent of a governmental body that is financially involved in the proposal work.

(j) When any agent, servant, or employee of the perspective bidder has participated in the preparation of plans or specifications for the proposed work.

Interpretation of Quantities in the Bid Schedule. The quantities appearing in the bid schedule are approximate and are prepared for the comparison of bids. Payment to the Contractor will be made only for the actual quantities of work performed and accepted or materials furnished according to the contract. The scheduled quantities of work to be done and materials to be furnished may be increased, decreased, or omitted as hereinafter provided.

Examination of Plans, Specifications, Special Provisions, and Site of Work. The bidder shall, before submitting a bid, carefully examine the provisions of the contract. The bidder shall inspect in detail the site of the proposed work, investigate and become familiar with all the local conditions affecting the contract and fully acquaint themselves with the detailed requirements of construction. Submission of an electronic bid shall be a conclusive assurance and warranty the bidder has made these examinations and the bidder understands all requirements for the performance of the work. If his/her bid is accepted, the bidder shall be responsible for all errors in the proposal resulting from his/her failure or neglect to comply with these instructions. The Awarding Authority will, in no case, be responsible for any costs, expenses, losses, or

change in anticipated profits resulting from such failure or neglect of the bidder to make these examinations.

The bidder shall take no advantage of any error or omission in the proposal and advertised contract. Any prospective bidder who desires an explanation or interpretation of the plans, specification, or any of the contract documents, shall submit a question online through BidNet to the Awarding Authority, in sufficient time to allow an online reply through BidNet by the Awarding Authority that can reach all prospective bidders before the question acceptance deadline. Any reply given a prospective bidder concerning any of the contract documents, plans, and specifications will be furnished to all prospective bidders on the BidNet platform including, but not limited to, an addendum, if the information is deemed by the Awarding Authority to be necessary in submitting bids or if the Awarding Authority concludes the information would aid competition. Oral explanations, interpretations, or instructions given before the submission of bids, unless at a prebid conference, will not be binding on the Awarding Authority.

Preparation of the Proposal. Bidders must submit their proposals electronically via BidNet. The proposal shall be executed properly, and bids shall be made for all items indicated in the proposal, except when alternate bids are asked, a bid on more than one alternate for each item is not required, unless otherwise provided. The bidder shall indicate in figures, a unit price for each of the separate items called for in the solicitation. The unit prices should be entered directly into BidNet; a paper form is not required.

When prequalification is required, the proposal shall be submitted by an authorized bidder in the same name and style as shown on the “Contractor’s Statement of Experience and Financial Condition” used for prequalification.

Evidence of participation in apprenticeship training programs applicable to the work to be performed on the project, which are approved by and registered with the United States Department of Labor’s Office of Apprenticeship, or its successor organization; and evidence that any applicable apprenticeship program has graduated at least five (5) apprentices in each of the past five (5) years for each of the construction crafts the bidder will perform on the project shall be submitted with the bid proposal. (Evidence of graduation rates are not required for apprentice able crafts dedicated exclusively to the transportation of material and equipment to and from the Public Works project.)

Rejection of Proposals. The Awarding Authority reserves the right to reject any proposal for any of the conditions in “Issuance of Proposal Forms” or for any of the following reasons:

(a) More than one proposal for the same work from an individual, firm, partnership, or corporation under the same name or different names.

(b) Evidence of collusion among bidders.

(c) Unbalanced proposals in which the bid prices for some items are, in the judgment of the Awarding Authority, out of proportion to the bid prices for other items.

(d) If the proposal does not contain a unit price for each pay item listed, except in the case of authorized alternate pay items or lump sum pay items.

(e) If the proposal is other than that furnished by the Awarding Authority; or if the form is altered or any part thereof is detached.

(f) If there are omissions, erasures, alterations, unauthorized additions, conditional or alternate bids, or irregularities of any kind which may tend to make the proposal incomplete, indefinite or ambiguous as to its meaning.

(g) If the bidder adds any provisions reserving the right to accept or reject an award, or to enter into a contract pursuant to an award.

(h) If the proposal is not accompanied by the proper proposal guaranty.

(i) If the proposal is not submitted electronically, or otherwise fails to meet the requirements of the above "Preparation of the Proposal" section.

Proposal Guaranty. Each proposal shall be accompanied by a bid bond on the Illinois Department of Transportation form contained in the proposal, executed by a corporate surety company satisfactory to the Awarding Authority, by a bank cashier's check or a properly certified check for not less than five percent of the amount bid, or for the amount specified in the following schedule:

Amount Bid		Proposal Guaranty
Up to	$5,000	$150
>$5,000	$10,000	$300
>$10,000	$50,000	$1,000
>$50,000	$100,000	$3,000
>$100,000	$150,000	$5,000
>$150,000	$250,000	$7,500
>$250,000	$500,000	$12,500
>$500,000	$1,000,000	$25,000
>$1,000,000	$1,500,000	$50,000
>$1,500,000	$2,000,000	$75,000
>$2,000,000	$3,000,000	$100,000
>$3,000,000	$5,000,000	$150,000
>$5,000,000	$7,500,000	$250,000
>$7,500,000	$10,000,000	$400,000
>$10,000,000	$15,000,000	$500,000
>$15,000,000	$20,000,000	$600,000
>$20,000,000	$25,000,000	$700,000
>$25,000,000	$30,000,000	$800,000
>$30,000,000	$35,000,000	$900,000
Over	$35,000,000	$1,000,000

If the bidder chooses to provide a bank cashier's check or a properly certified check (as opposed to the Certified Local Agency Proposal Bid Bond) as part of the proposal submittal, the certified check must be delivered to the Kane County Division of Transportation (41W011 Burlington Rd, St. Charles, IL 60175) prior to the solicitation closing date (and time).

In the event that one proposal guaranty check is intended to cover two or more proposals, the amount must be equal to the sum of the proposal guaranties which would be required for each individual proposal.

Bank cashier's checks or properly certified checks accompanying proposals shall be made payable to the Treasurer of Kane County, when a County is the Awarding Authority; or the City, Village, Town or Township Treasurer, when a city, County, village, town or township is the Awarding Authority.

The proposal guaranty checks of all, except the two lowest responsible, will be returned promptly after the proposals have been checked, tabulated, and the relation of the proposals established. Proposal guaranty checks of the two lowest bidders will be returned as soon as the contract and contract bond of the successful bidder have been properly executed and approved. Bid bonds will not be returned.

After a period of three working days has elapsed after the date of opening proposals, the Awarding Authority may permit the two lowest bidders to substitute for the bank cashier's checks or certified checks submitted

with their proposals as proposal guaranties, bid bonds on the Illinois Department of Transportation forms executed by corporate surety companies satisfactory to the Awarding Authority.

Submittal of Proposals. Electronic submittal of all bid packet proposal items is required. If you have questions or problems while submitting bid packet proposal items, please call the BidNet Support Team at 800-835-4603 for direct assistance. All proposals must be submitted to the BidNet system prior to the specified closing date and time, in order to be considered for the solicitation.

Withdrawal of Proposals. Proposals may be withdrawn at any time from the Bidnet platform prior to the specified closing date and time.

Opening of Proposals. 'Unofficial' proposal results will be posted in BidNet, after the advertisement closing date. Once all submitted documentation has been verified, 'As Read' proposal results will be uploaded. As a registered Vendor in BidNet, you will receive automatic notification when any results have been posted.

Consideration of Proposals. After the proposals are opened, they will be compared on the basis of the summation of the products of the quantities shown in the bid schedule by the unit bid prices. In awarding contracts, the Awarding Authority will, in addition to considering the amounts stated in the proposals, take into consideration the responsibility of the various bidders as determined from a study of the data required under "Prequalification of Bidders", and from other investigations which it may elect to make.

The right is reserved to reject any or all proposals, to waive technicalities, or to advertise for new proposals, if in the judgment of the Awarding Authority, the best interests of the Awarding Authority will be promoted thereby.

Award of Contract. The award of contract will be made once authorization has been provided by the Awarding Authority to the lowest responsible and qualified bidder whose proposal complies with all the requirements prescribed. The successful bidder will be notified of intent that his/her bid has been accepted, and subject to the following conditions, the bidder will then be the Contractor.

An approved contract executed by the Awarding Authority is required before the Awarding Authority is bound. An award may be cancelled any time by the Awarding Authority prior to execution in order to protect the public interest and integrity of the bidding process or for any other reason if, in the judgment of the Awarding Authority, the best interests of the Awarding Authority will be promoted thereby.

If a contract is not awarded within 120 days after the opening of proposals, bidders may file a written request with the Awarding Authority for the withdrawal of their bid, and the Awarding Authority will permit such withdrawal.

Requirement of Contract Bond. If the Awarding Authority requires a Contract Bond, the Contractor or Supplier shall furnish the Awarding Authority a performance and payment bond with good and sufficient sureties in the full amount of the contract as the penal sum. The surety shall be acceptable to the Awarding Authority, shall waive notice of any changes and extensions of time, and shall submit its bond on the form furnished by the Awarding Authority.

Execution of Contract. The contract shall be executed by the successful bidder and returned, together with the Contract Bond, within 15 days after the contract has been mailed to the bidder.

If the bidder to whom the award is made is a corporation organized under the laws of a State other than Illinois, the bidder shall furnish the Awarding Authority a copy of the corporation's Certificate of Authority to do business in the State of Illinois with the return of the executed contract and bond. Failure to furnish such evidence of a Certificate of Authority within the time required will be considered as just cause for the annulment of the award and the forfeiture of the proposal guaranty to the Awarding Authority, not as a penalty, but in payment of liquidated damages sustained as a result of such failure.
Failure to Execute Contract. If the contract is not executed by the Awarding Authority within 15 days

following receipt from the bidder of the properly executed contracts and bonds, the bidder shall have the right to withdraw his/her bid without penalty.

Failure of the successful bidder to execute the contract and file acceptable bonds within 15 days after the contract has been mailed to the bidder shall be just cause for the cancellation of the award and the forfeiture of the proposal guaranty which shall become the property of the Awarding Authority, not as penalty, but in liquidation of damages sustained. Award may then be made to the next lowest responsible bidder, or the work may be re-advertised and constructed under contract, or otherwise, as the Awarding Authority may decide.

START AND COMPLETION DATE

After Notice to Proceed is issued and prior to starting of construction activities the Contractor is expected to submit all required documentation for review and/or approval. This documentation will include, but not limited to, shop drawings, catalog cuts and other design related calculation or drawings requiring review and/or approval.

The Contractor is prohibited from doing any onsite construction activities without Authorization by the Engineer. The Contractor shall complete this work by November 25th, 2026.

PROSECUTION OF WORK

Revised on: 3/15/2023

Add the following paragraph to Article 108.02 of the Standard Specifications:

"The Contractor shall maintain throughout the course of the project, and provide to the Engineer, at the Engineer's request, a detailed progress schedule of planned construction related tasks and locations that projects a minimum of 2 weeks in to the future. At the Engineer's request, progress schedules of 4 weeks may be required."

At the Pre-Construction Meeting, the Contractor shall submit a draft progress schedule, ready for review and approval, and a prepared list of subcontractors, which will both be discussed and approved by the Engineer. This project schedule shall show all routes to be worked on, an anticipated estimate of time (in working days) to accomplish each item of work, as well as sequence of operations. All work shall be coordinated with the Engineer so that all work is completed prior to the completion date and in coordination with any other Kane County projects.

The progress schedule may be on IDOT form BC 255 or a detailed Gantt Charts-type schedule.

ADDITION, DELETION AND/OR REDUCTION OF PLAN QUANTITIES (COUNTY)

Revised on: 3/15/2023

The County reserves the right to add, delete and/or reduce the awarded (plan) quantity of any item in its entirety or partially without claim by the Contractor for loss of profit or overhead.

CONTRACTOR'S DAILY NOTIFICATION

Revised on: 03/15/2023

The Contractor shall notify the Engineer and /or his designated representative prior to the beginning of each day's work as to the location and type of work that is scheduled to be performed that day. The Contractor's notification shall be ***at least 48 hours prior*** to the day of actual work.

LOCATION COMPLETION
Revised on: 3/15/2023

Once work has commenced, the Contractor shall diligently pursue completion of the subject work, per the Contractor Working Hours special provision and weather permitting, until all work included in the contract has been completed; unless written approval to the contrary has been granted by the Engineer. **In the event the contractor fails to maintain a continuous operation, a deficiency deduction of $5000 per calendar day will be applied to monies due to the Contractor until the continuous operation is re-established and maintained.**

CLEAN CONSTRUCTION OR DEMOLITION DEBRIS
Updated: 3/15/2023

Earthwork operations for this project shall be completed in accordance with Section 202 of the Standard Specifications and clean construction or demolition debris material properly disposed of in accordance with Article 202.03.

This special provision only applies if the Contractor chooses to dispose of material at a permitted CCDD or registered uncontaminated soil fill facility. *The Contractor is advised to consider the cost of disposing of all surplus materials off-site and properly reflect those costs in their bids for earthwork and removal items.* The Contractor must be thoroughly familiar with the provisions of the Illinois Environmental Protection Act as it relates to proper disposal of clean excavated material and construction debris.

Should the Contractor choose to dispose of clean materials at a permitted CCDD or registered uncontaminated soil fill facility, the Contractor shall be responsible for the lawful removal of all excavated clean soil, material and other clean construction or demolition debris in compliance with Public Act 96-1416. Disposal of clean materials at a permitted CCDD or registered uncontaminated soil fill facility will require that Form LPC-663 be submitted to the operator of that location before any materials can be disposed of at that site**.** Each certification shall cover only clean material from the specified job site. The Contractor shall be responsible for having the required analysis of soil materials completed and the Form 663 adequately completed and signed by a Professional Engineer or Geologist licensed in the State of Illinois

The Contractor is not responsible for the cost of soil remediation. In the event material is rejected it will be returned to the site and placed in isolation of any other site material, where the extent of additional effort required to dispose of the material will be determined. The cost of returning rejected material will be the responsibility of the Contractor. The extent of additional effort for disposal or use of rejected material will be coordinated between the Engineer and the Contractor.

It should be noted that “Unsuitable Material” defined in these special provisions for Removal and Disposal of Unsuitable Material should not be confused with “contaminated” or “hazardous” materials.

COOPERATION BY CONTRACTOR
Created: 3/15/2023

The Contractor should take note of Article 105.08 of the “Standard Specifications”. Multiple improvements are proposed along routes included in this subject contract and will require the Contractor, on this contract, to work simultaneously with Contractors on other adjacent contracts. Adjacent contracts may consist of any or all of the following:

- 2026 Kane County Resurfacing Project, Section #25-00591-00-RS

Aforementioned, this work may affect the work sequence for the contract.

It is pertinent that cooperation and scheduling be coordinated with Kane County and the Engineer to ensure all work done is performed in the proper sequential order, to ensure a final quality product, and that all Traffic Control is placed properly and safely between contracts.

No additional compensation will be paid for coordination of work with other contracts.

In the event a Contractor from a simultaneous contract cannot be reached, the Contractor shall call Ken Mielke, the County Assistant Chief of Construction at 630-406-7172.

SPECIAL PROVISION FOR INSURANCE (COUNTY)

Revised on: 3/15/2023

The Contractor shall obtain and keep in full force the following insurance coverages:

POLICY:
Contractor's Commercial General Liability
ADDITIONAL NAMED INSURED:
The County of Kane, its officers, employees and agents

All other provisions of Article 107.27 of the Standard Specifications shall apply.

CONTRACTOR DISCLOSURE ACKNOWLEDGEMENT

Revised on: 8/6/2024

KANE COUNTY CODE, ARTICLE III, DIVISION 3, SECTION 2-211

1. Prior to award, every Contractor or vendor who is seeking or who has obtained contracts or change orders to contracts or two (2) or more individual contracts with KANE COUNTY resulting in an amount greater than Fifteen Thousand Dollars ($15,000) shall disclose to the Kane County Purchasing Department, in writing all cumulative campaign contributions, (which includes multiple candidates) made within the previous twelve (12) months of awarding of the contract made by that Contractor, union, or vendor to any current officer or countywide elected officer whose office the contract to be awarded will benefit. Disclosure shall be updated annually during the term of a multi-year contract and prior to any change order or renewal requiring Board level approval. For purposes of this disclosure requirement, "Contractor or vendor" shall include owners, officers, managers, insurance brokers, lobbyists, agents, consultants, bond counsel and underwriters counsel, subcontractors, corporations, partnerships, associations, business trusts, estates, trustees, and/or beneficiaries under the control of the contracting person, and political action committees to which the contracting person has made contributions.

2. All Contractors and vendors who have obtained or are seeking contracts with Kane County must disclose the following information which shall be certified and attached to the application or document. Penalties for knowingly violating disclosure requirements will potentially result in immediate cancellation of the contract, and possible disbarment from future County contracts:

A. Name, address and percentage of ownership interest of each individual or entity having a legal or a beneficial interest of more than five percent (5%) in the applicant. Any entity required by law to file a statement providing substantially the information required by this paragraph with any other government agency may file a duplicate of such statement;
B. Names and contact information of their lobbyists, agents and representatives and all individuals who are or will be having contact with County employees or officials in relation to the contract or bid. This information disclosure must be updated when any changes to

the information occurs.

C. Whenever any interest required to be disclosed in paragraph (A) above is held by an agent or agents, or a nominee or nominees, the principals for whom such agents or nominees hold such interest shall also be disclosed. The application of a spouse or any other party, if constructively controlled by another person, or legal entity as set forth above, shall state the name and address and percentage of beneficial interest of such person or entity possessing such constructive control and the relationship under which such control is being or may be exercised. Whenever a stock or beneficial interest is held by a corporation or other legal entity, such shareholder or beneficiary shall also make disclosure as required by paragraph (A) above.

D. A statement under oath that the applicant has withheld no disclosures as to economic interests in the undertaking nor reserved any information, data or plan as to the intended use or purpose for which it seeks County Board or other county agency action.

3. All disclosures and information shall be current as of the date upon which the application is presented and shall be maintained current until such time as Kane County shall take action on the application. Furthermore, this information shall be maintained in a database by the Purchasing Department, and made available for public viewing.

4. Notwithstanding any of the above provisions, the County Purchasing Department with respect to contracts awarded may require any such additional information from any applicant which is reasonably intended to achieve full disclosure relevant to the application for action by the County Board or any other County agency.

5. Any failure to comply with the provisions of this section shall render any ordinance, ordinance amendment, County Board approval or other County action in behalf of the applicant failing to comply voidable at the option of the County Board or other County agency involved upon the recommendation of the County Board Chairman or the majority of the County Board.

6. Contractor Disclosure information shall be sent to the Kane County Purchasing Department and the Kane County Division of Transportation at the following address, or via email, prior to Transportation Committee of the Kane County Board:

Kane County Government Center
Purchasing Department, Bldg. A
719 S. Batavia Ave. Geneva, IL 60134
purchasing@KaneCountyIL.gov

Kane County Division of Transportation
41W011 Burlington Road
St. Charles, IL 60175
kdotcomments@co.kane.il.us

PREVAILING WAGES
Revised on: 3/15/2023

By submitting a bid, bidder expressly agrees to comply with all applicable State and Federal Prevailing Rate of Wage Laws, and to take all steps necessary to remain in compliance therewith.

Prevailing Wage Rates: It is the policy of the State of Illinois as declared in "AN ACT regulating wages of laborers, mechanics and other workman employed in any public works by the State, County, City or any political subdivision or by any work under construction for public works" approved June 26, 1941, that a wage of no less that the general prevailing hourly rate as paid for work of a similar character in a locality in which work is performed, shall be paid to all laborers, workmen and mechanics employed by and on behalf of any and all public body engaged in public works, exclusive of maintenance work.
The responsive Bidder must include with their bid a separate sheet showing trades to be employed and wage rates to be paid. Prevailing wage rates are subject to revision monthly and the responsive bidder is responsible for any future adjustment thereof. Copies of the current prevailing wage rates are always

available from the Illinois Department of Labor on their website.

The Contractor shall pay the current Illinois Department of Labor Prevailing Wage Rates for any and all projects worked on for the COUNTY OF KANE. The undersigned also agrees to provide the Kane County Division of Transportation a sheet showing all trades to be employed and wage rates to be paid for each construction or repair project bid on or contracted for.

BID PROTEST
Created on: 8/11/2023

All bid protests shall be handled according to the current the Kane County Procurement Ordinance.

TRAFFIC CONTROL AND PROTECTION (SPECIAL)
Revised: 03/23/2023

Traffic Control shall be in accordance with the applicable sections of the latest editions of the Standard Specifications, the Supplemental Specifications, the Illinois Manual on Uniform Traffic Control Devices for Streets and Highways, any special details and Highway Standards contained in the plans and the Special Provisions contained herein, as traffic conditions and working conditions warrant.

Special attention is called to Article 107.09 and Division 700 of the Standard Specifications and the following Highway Standards, Details, Quality Standard for Work Zone Traffic Control Devices, Supplemental Specifications and Recurring Special Provisions, and Special Provisions contained herein, relating to traffic control.

Keeping roads clean using a mechanical sweeper shall also be included in this pay item.

The Contractor shall contact the Engineer at least 72 hours before beginning work.

Two-way movement on all roads and access to abutting properties shall be maintained at all times.

No Contractor personnel or equipment shall be allowed onto the road surface or shoulders unless flaggers and traffic control devices are in place.

All flaggers (personnel directing traffic) within the right-of-way limits of the roadway, must have a traffic control sign (paddle board) in hand at all times. Failure to comply with this requirement will result in a Traffic Control Deficiency for each personnel, per occurrence.

The Contractor shall be required to use the latest version of the Highway Standards listed below as traffic conditions and working conditions warrant.

Highway Standards: 701421 701901

Details:
The Contractor shall provide, at a minimum, two changeable message signs at least seven days prior to starting construction through project completion, for all locations listed within the contract. The signs shall be located and programmed as directed by the Engineer. The changeable message signs will be paid for at the contract unit price per calendar day for CHANGEABLE MESSAGE SIGN.

All Construction signs used shall meet the MUTCD, IDOT Highway Traffic Control Standards and Standard Specifications for Roadway and Bridge Construction Specifications for size, distances and placement. If at

any time the signs are in place but not applicable, they shall either be removed, knocked face down to the ground, turned from the view of motorists or covered as directed by the Engineer.

All signs shall be clean and in new or excellent condition.

These signs shall have minimum dimensions of 48 inches by 48 inches and have a black legend and border on an orange reflectorized background. The legend shall read:

"ROADWORK TO BEGIN"
"WEEK OF XX/XX/26"

and
"ROAD CONSTRUCTION AHEAD"

Recurring Special Provisions:

Local Roads and Streets Recurring Special Provisions:
Work Zone Traffic Control (LRS)
Flaggers in Work Zones (LRS)

At the preconstruction meeting, the Contractor shall furnish the name and 24 hour contact information of the individual in its direct employ who is to be responsible for the installation and maintenance of the traffic control for this project. If the actual installation and maintenance are to be accomplished by a subcontractor, consent shall be requested of the Engineer and/or his authorized representative at the time of the preconstruction meeting in accordance with Article 108.01 of the Standard Specifications. This shall not relieve the Contractor of the requirement to have a responsible individual in its direct employ supervise this work. The Engineer will provide the Contractor the name of its representative who will be responsible for the administration of the Traffic Control Plan.

Method of Measurement: Traffic Control and Protection shall be measured for payment as Lump Sum, which shall consist of furnishing, installation, maintenance, relocation and removal of work zone traffic control and protection; including all labor, materials, and equipment necessary to complete the work described above.

Basis of Payment: Traffic Control and Protection shall be paid for at the contract unit price per lump sum for TRAFFIC CONTROL AND PROTECTION (SPECIAL) which price shall include all labor, materials, and equipment necessary to complete the work described above for all work associated with maintaining vehicular and pedestrian traffic control and protection and detours within the contract. The changeable message signs will be paid for at the contract unit price per calendar day for CHANGEABLE MESSAGE SIGN.

FIELD MEASUREMENTS

Revised on: 1/2/2024

The Contractor is advised that it shall be its full responsibility to verify all dimensions, conditions, materials, and details before ordering materials. The Contractor shall verify the dimensions shown on the plans with those actually existing on the structure to determine if any discrepancies exist. Any discrepancies discovered by the Contractor shall be immediately reported to the Engineer in writing for revisions to plans, quantities and/or details as required.

No additional compensation will be allowed to the Contractor for complying with the above verification requirements. Any revisions to dimensions or details resulting from the required field verifications or for any delays due to required revisions shall first be approved by the Engineer.

MAINTENANCE OF ROADWAYS / TRAFFIC CONTROL DEFICIENCY
Revised: 2/13/2025

Beginning on the date that work begins on the project, the Contractor shall assume responsibility for normal maintenance and/or any damage of all existing roadways within the limits of the improvement. This normal maintenance shall include all repair work deemed necessary by the Engineer, but shall not include snow removal operations. This shall include any and all pot holes which may develop, after milling of the roadway, while the roadway is left open before paving operations begin. All pothole repairs will be considered incidental to the project, and will not be paid for separately.

Traffic control and protection for maintenance of roadways will be provided by the Contractor as required by the Engineer.

The Contractor shall commence work on all maintenance of roadways items within 2 hours of discovering such items or within 2 hours of notification by the Engineer and shall complete such items in an expediant and timely manner. Failure to do so may result in a ***deficiency of $2000 per calendar day***.

If items of maintenance work have not been provided for in the contract or otherwise specified for payment, such items, including the accompanying traffic control and protection required by the Engineer, will be paid for in accordance with Article 109.04 of the Standard Specifications.

Basis of Payment: This work shall be paid for at the contract unit price per lump sum for TRAFFIC CONTROL AND PROTECTION (SPECIAL), which price shall be payment in full for all labor, materials, and equipment necessary to complete the work described above.

MATERIAL TESTING DAILY NOTIFICATION (COUNTY)
Updated: 3/23/2023

The County has retained the services of a testing agency to sample and test asphalt and concrete mix designs for County and Township projects. Contact information provided in memorandum '2023 QC TESTING REQUIREMENTS AND PROCEDURE', dated March 8, 2023, shall be followed for these services.

John Lavallee, S.T.A.T.E. Testing
Phone: 815- 378-5237
Email: jlavallee@statetestingllc.com

In order to ensure that samples will be drawn, Contractors or their Subcontractors must alert the testing agency as well as the Engineer or his representative assigned to the project on days when material will be placed on these jobs. This is similar to the IDOT Materials testing procedure. Calls must be placed at least one day prior to any material placement before 12:00 pm, noon. **In the event that testing has been scheduled and weather is unfavorable the Contractor will be responsible to alert a representative of the testing agency as soon as the decision not to place material is made.** It is understood that these decisions are made in the early hours of the day. The purpose of this policy is to make sure that testing is coordinated and conducted in a timely manner and to notify the Contractor that they must inform the proper personnel, in a timely fashion, to stop scheduled testing on days when work is canceled.

At the preconstruction meeting, roles, responsibilities, and 24 hour contact information will be established and exchanged between the Engineer and the Contractor.

In the event that the testing representative cannot be reached the Contractor will call Ken Mielke - Assistant Chief of Construction at 630-406-7172.

EQUIPMENT PARKING AND STORAGE
Revised on: 3/16/2023

The Contractor shall provide written approval from the land owner, to the Engineer, for any equipment, staging material, and/or storage, used by/for the Contractor's forces, on any property not owned by the Contractor or County. Verification from the Engineer, prior to any placement of equipment, staging material and/or storage, must be received before the equipment parking staging and/or storage occurs.

Ignoring or not complying with this requirement may result in a Traffic Control Deficiency for each day of violation.

No additional compensation will be allowed to the Contractor for complying with these verification requirements.

PREQUALIFICATION OF BIDDERS
Revised: 3/16/2023

PREQUALIFICATION OF BIDDERS in accordance with Section 102.01 of the Standard Specifications will be required of all bidders on this proposal. The primary Contractor will be required to meet all of the following prequalification code(s) for the discipline of work to be completed:
009-Structures (Highway) or 010-Structures Repair

The primary Contractor and/or any subcontractor will be required to meet the prequalification code for the discipline of work they will be responsible for completing.

CONTRACTOR WORKING HOURS
Revised on: 12/30/2024

Construction Operations shall be confined to the hours of 9am to 3pm, or as directed by the Engineer, depending on the type of roadway affected during the work week for all roads. The work week shall be defined as Monday through Friday; or as directed by the Engineer. Any work outside of the previously specified time frames shall be first approved by the Engineer, in writing. This time regulation shall apply to all work on the roadways within the contract. This time regulation shall not apply to permanent lane closures and lane shifts that are a part of staged construction operations lasting more than 1 month in duration, and/or emergency operations.

Night Work, on High Volume Roads, may be permitted upon review and approval of the Engineer. This includes all potential night work to be done, including any work done by a subcontractor. Once night work has been approved and initiated, night work shall remain a continuous operation on all roads which have been previously approved in writing. The Contractor shall not at any time cause delays in night work by stopping progress or causing delays, unless previously approved by the Engineer in writing. If delays or lack of progress occur, this will result in a deficiency of $5,000.00 per calendar day. The request for night work, from the Contractor, shall be made at the pre-construction meeting in writing. If night work is permitted, an additional meeting will be required before any night work is initiated. All critical management and field personnel will be required to attend a night work meeting. If night work is permitted, day work will not be allowed simultaneously; unless requested and approved by the Engineer in writing.

Working hours of 7am to 4pm, or as directed by the Engineer, Monday through Friday, shall apply to work on the following roads:

_____
_____
_____

Working hours of 9am to 3pm, or as directed by the Engineer, Monday through Friday, shall apply to work on the following roads:
_Randall Road____
_____
_____

These work hour restrictions shall be incidental to the contract and no additional compensation shall be awarded.

AVAILABLE REPORTS

☒ No project specific reports were prepared.

When applicable, the following checked reports and record information is available for Bidders' reference upon request:

- ☐ Record structural plans
- ☐ Preliminary Site Investigation (PSI)
- ☐ Preliminary Environmental Site Assessment (PESA)
- ☐ Soils/Geotechnical Report
- ☐ Boring Logs
- ☐ Pavement Cores
- ☐ Location Drainage Study (LDS)
- ☐ Hydraulic Report
- ☐ Noise Analysis
- ☐ Other:

PUBLIC CONVENIENCE AND SAFETY (D-1)
Effective: May 1, 2012
Revised: July 15, 2012

Add the following to the end of the fourth paragraph of Article 107.09:

"If the holiday is on a Saturday or Sunday, and is legally observed on a Friday or Monday, the length of Holiday Period for Monday or Friday shall apply."

Add the following sentence after the Holiday Period table in the fourth paragraph of Article 107.09:

"The Length of Holiday Period for Thanksgiving shall be from 5:00 AM the Wednesday prior to 11:59 PM the Sunday After"

Delete the fifth paragraph of Article 107.09 of the Standard Specifications:

"On weekends, excluding holidays, roadways with Average Daily Traffic of 25,000 or greater, all lanes shall be open to traffic from 3:00 P.M. Friday to midnight Sunday except where structure construction or major rehabilitation makes it impractical."

BRIDGE DECK THIN POLYMER OVERLAY
Effective: May 7, 1997
Revised: June 28, 2024

Description. This work shall consist of furnishing and installing a bridge deck thin polymer overlay (TPO). TPO is a concrete deck overlay consisting of a concrete deck treatment followed by two layers of hybrid polymer epoxy-urethane each containing a blend of hard aggregate, resulting in an overlay thickness of 3/8 inch as defined herein. The overlay is intended to fill and repair cracks, seal the deck concrete, provide the specified friction, resist wearing, and withstand traffic loads, extreme changes in weather conditions, and deformations due to structure loading and temperature changes.

This work shall also include the final surface preparation of the existing concrete deck by shot blasting after all repairs have been completed and cured as specified.

The Department maintains a Qualified Product List for thin polymer overlays. This list can be found on the Department's web site under Bridge Deck Thin Polymer Overlay Systems. The supplier of the material shall be selected from this list and shall furnish a technical representative at the job site during overlay placement to provide recommendations on technical aspects of the installation of the bridge deck thin polymer overlay.

Materials. The manufacturer of the materials shall supply a Safety Data Sheet (SDS) detailing the appropriate safety and handling considerations. These SDS shall be prominently displayed at the storage site and all workers shall be thoroughly familiar with safety precautions before handling the material.

The concrete deck treatment consists of a two-part polymer (components A + B), free of any fillers or volatile solvents, and formulated to be mixed at a ratio specified by the overlay team personnel. Provide material having viscosity conforming to AASHTO M235, Grade 1 and surface tension that will effectively fill and repair cracks, seal the deck concrete, and serve as a primer that enhances the bonding of the epoxy-urethane and aggregate to the concrete deck. Use concrete deck treatment material that is compatible with the epoxy-urethane and aggregate and approved by the overlay installer.

(a) Concrete Deck Treatment. The concrete deck treatment consists of a two-part polymer (components A + B), free of any fillers or volatile solvents, and formulated to be mixed at a ratio specified by the overlay team personnel. Provide material having viscosity conforming to AASHTO M235, Grade 1, and the AASHTO MP35, Table 1 properties of compressive strength (24 hrs.), tensile strength (7 days), tensile elongation (7 days), water absorption, Shore D hardness, and be 100% solids and have a surface tension that will effectively fill and repair cracks, seal the deck concrete, and serve as a primer that enhances the bonding of the epoxy-urethane and aggregate to the concrete deck. Use concrete deck material that is compatible with the epoxy-urethane and aggregate and approved by the overlay installer.

(b) Epoxy Resin Binder. The binder shall consist of a two-part exothermic epoxy resin which holds the aggregate firmly in position and conforms to the requirements of AASHTO MP35, Table 1. The epoxy resin shall be packaged in suitable, well-sealed containers, clearly labeled as to the type of material and the ratio of components to be mixed by volume. Each packaged component shall display the type (resin or hardener), brand name, name of the manufacturer, lot number, temperature range for storage, expiration date, and quantity. Each container shall be labeled with the appropriate caution warnings regarding contact with the component. The epoxy resin binder manufacturer shall ensure that the material is suitable for temperatures that will be experienced at the time of placement. The epoxy resin binder shall be on the Department's current "Qualified Product List for Bridge Deck Thin Polymer Overlay Systems".

(c) Aggregate. The aggregate shall contain less than 0.2 percent moisture and be clean and free of dust. The aggregate shall have a Mohs scale hardness greater than 6 and shall consist of bauxite, crushed porphyry, aluminum oxide, or other similarly hard, durable, angular-shaped aggregate, as recommended by the manufacturer and approved by the Engineer. Wet bottom boiler coal slag shall not be used.

The aggregate shall conform to AASHTO MP35, Section 6.2.

At the pre-construction conference, the Contractor shall provide the Engineer with the source of the material that will be used. The manufacturer shall furnish samples of resin material and aggregate as required by the Engineer.

Equipment. The equipment used shall be subject to the approval of the Engineer and shall meet the following requirements:

(a) Surface Preparation Equipment. Surface preparation equipment shall be according to the applicable portions of Section 1100 and the following:

(1) Mechanical Scarifying Equipment. Scarifying equipment shall be a power-operated, mechanical scarifier capable of uniformly scarifying or removing the existing concrete surface and new patches to the depths required satisfactorily. Other types of removal devices may be used if their operation is suitable, and they can be demonstrated to the satisfaction of the Engineer.

(2) Shotblasting Equipment. The blasting medium shall be steel shot. The size and hardness of the shot, the flow of the shot, the forward speed, and the number of passes shall be as recommended by the manufacturer. The shot-blasting equipment shall be capable of removing weak concrete at the surface, including the microfractured concrete surface layer remaining because of mechanical scarification, and shall have oil traps. The cleaning residue shall be contained and removed by the shot-blasting equipment.

(3) Hand-Held Blast Cleaning Equipment. Blast cleaning using hand-held equipment shall be performed by abrasive blasting. Hand-held blast cleaning equipment shall have oil traps.

(4) Power-Driven Hand Tools. Power-driven hand tools will be permitted. Jackhammers shall be lighter than the nominal 45-pound (20 kg) class. Jackhammers or chipping hammers shall not be operated at angles over 45 degrees, measured from the surface of the slab.

(b) Pull-off Test Equipment. Equipment used to perform pull-off testing shall be either approved by the Engineer or obtained from one of the following approved sources:

James Equipment
007 Bond Tester
800-426-6500

Germann Instruments, Inc.
BOND-TEST Pull-off System
847-329-9999

SDS Company
DYNA Pull-off Tester
805-238-3229

Pull-off test equipment shall include all miscellaneous equipment and materials to perform the test and clean the equipment, as indicated in the Illinois Pull-off Test (Surface or Overlay Method). Before the start of testing, the Contractor shall submit to the Engineer a technical data sheet and material safety data sheet for the epoxy used to perform the testing. For solvents used to clean the equipment, a material safety data sheet shall be submitted.

(c) Overlay Application Equipment. For mechanical applications, the equipment shall consist of an epoxy distribution system, aggregate dispersing equipment, sweeper broom or vacuum truck, and a source of lighting if work is to be performed at night. The epoxy distribution system shall thoroughly blend the epoxy components so that the resulting product has the same material properties as certified in the Materials section. The Engineer reserves the right to sample from the epoxy distribution system at any time during placement operations. The aggregate spreader shall be propelled in such a manner as to uniformly apply the aggregate so that 100 percent of the epoxy material is covered to excess. The sweeper broom or vacuum truck shall be self-propelled. Equipment shall provide compressed air that is free from oil and water.

For hand applications, the equipment shall consist of calibrated containers, a paddle-type mixer, squeegees or rollers, and a broom. All equipment shall be suitable for mixing and placement according to the epoxy manufacturer's recommendations.

Construction. All hot-mix asphalt removal and deck repairs shall be performed and cured according to the Special Provision for "Deck Slab Repair" before any surface preparation operations. The thin polymer overlay shall not be placed on any concrete surface that is less than 28 days old.

(a) Surface Preparation.

(1) Bridge Deck Scarification. When specified, concrete bridge deck scarification shall be performed to the depth noted on the plans. Sidewalks, curbs, drains, reinforcement, and/or existing transverse and longitudinal joints that are to remain in place shall be protected from damage during scarification and cleaning operations. All damage caused by the Contractor shall be corrected at the Contractor's expense, to the satisfaction of the Engineer.

The scarification work shall consist of removing the designated concrete deck surface using mechanical scarifying equipment. In areas of the deck that are not accessible to the scarifying equipment, power-driven hand tools will be permitted.

A trial section located on the existing deck surface will be designated by the Engineer. The Contractor shall demonstrate that the equipment, personnel, and methods of operation are capable of producing results that are satisfactory to the Engineer. The trial section will consist of an area of approximately 30 sq. ft. (3 sq m).

Once the settings are established, they shall not be changed without the permission of the Engineer. The removal shall be verified, as necessary, at least every 16 ft. (5 m) along the cutting path. If concrete is being removed below the desired depth, the equipment shall be reset or recalibrated.

All areas designated to be scarified shall be scarified uniformly to the depth as specified on the plans but shall not exceed 1 in. (25 mm). Concrete removal below the specified depth shall be replaced at the Contractor's expense, to the satisfaction of the Engineer.

(2) Deck Patching. After bridge deck scarification, the deck shall be thoroughly cleaned of broken concrete and other debris. The Engineer will sound the scarified deck and all unsound areas will be marked for removal and repairs. All designated patching shall be completed according to the Special Provision for “Deck Slab Repair.”

Patching shall be completed before final surface preparation. Patches shall be struck off and then roughened with a suitable stiff bristled broom or wire brush to provide a rough texture design to promote bonding to the overlay. Hand finishing of the patch surface shall be kept to a minimum to prevent overworking of the surface.

(3) Final Surface Preparation. Final surface preparation shall consist of the operation of shot-blasting equipment to remove any weak concrete at the surface, including the microfractured concrete surface layer remaining because of mechanical scarification. Any areas determined by the Engineer to be inaccessible to the shot blasting equipment shall be thoroughly blast-cleaned with hand-held equipment.

Final surface preparation shall also include the cleaning of all dust, debris, and concrete fines from the deck surface including vertical faces of curbs and barrier walls up to a height of 1 in. (25 mm) above the overlay. Compressed air shall be used for this operation. When using compressed air, the air stream must be free of oil. Any grease, oil, or other foreign matter that rests on or has absorbed into the concrete shall be ````removed completely.

After the final surface preparation has been completed and before placement of the overlay, the prepared deck surface will be tested by the Engineer according to the Illinois Pull-off Test (Surface Method). The Contractor shall provide the test equipment.

a. Start-up Testing. Before the first overlay placement, the Engineer will evaluate the shot-blasting method. The start-up area shall be a minimum of 600 sq. ft. (56 sq. m). After the area has been prepared, six random test locations will be determined by the Engineer, and tested according to the Illinois Pull-off Test (Surface Method).

The average of the six tests shall be a minimum of 175 psi (1,200 kPa) and each test shall have a minimum strength of 160 psi (1,100 kPa). If the criteria are not met, the Contractor shall adjust the shotblasting method. Start-up testing will be repeated until satisfactory results are attained.

Once an acceptable shot-blasting procedure (speed, size of shot, etc.) is established, it shall be continued for the balance of the work. The Contractor may, with permission of the Engineer, change the shotblasting procedure or equipment, in which case additional start-up testing will be required.

b. Lot Testing. After start-up testing has been completed, the following testing frequency will be used. For each structure, each stage will be divided into lots of not more than 4500 sq. ft. (420 sq m). Three random test locations will be determined by the Engineer, and tested according to the Illinois Pull-off Test (Surface Method).

The average of the three tests shall be a minimum of 175 psi (1,200 kPa) and each test shall have a minimum strength of 160 psi (1,100 kPa). In the case of a failing individual test or a failing average of three tests, the Engineer will determine the area that requires additional

surface preparation by the Contractor. Additional test locations will be determined by the Engineer.

In addition to start-up and lot testing, the Department may require surface pull-off testing of areas inaccessible to shot-blasting equipment and blast cleaning with hand-held equipment. The Engineer will determine each test location, and each test shall have a minimum strength of 175 psi (1,200 kPa).

(b) Application of Overlay

(1) Overlay Placement. The handling and mixing of the epoxy resin and hardening agent shall be performed safely to achieve the desired results according to the manufacturer's written recommendations. Overlay materials shall not be placed when ambient air temperatures are below 55°F (13°C) or above 90°F (32°C), or when deck temperature is below 60°F (16°C). All components shall have a temperature no less than 60°F (16°C) immediately before mixing and placement. Overlay materials shall not be placed when rain is forecast within 24 hours of application.

There shall be no visible moisture present on the surface of the concrete at the time of application of the thin polymer overlay. A plastic sheet left taped in place for a minimum of two hours, according to ASTM D 4263, shall be used to identify moisture in the deck.

Construction traffic shall not be allowed on any portion of the deck that has been shotblasted or on the overlay without approval from the Engineer. Overlay placement shall begin as soon as possible after the surface preparation operation. In no case shall the time between surface preparation and application of the first lift exceed 24 hours.

The polymer overlay shall consist of a two-course application of epoxy and aggregate. Each of the two courses shall consist of a layer of epoxy covered with a layer of aggregate in sufficient quantity to completely cover the epoxy. The total thickness of the overlay shall not be less than 1/4 inch (6 mm). The dry aggregate shall be applied in such a manner as to cover the epoxy mixture completely within five minutes of application. The dry aggregate shall be sprinkled or dropped vertically in a manner such that the level of the epoxy mixture is not disturbed. First course applications that do not receive enough aggregate before the gel time shall be removed and replaced. A second course applied with insufficient aggregate may be left in place but will require additional applications before opening to traffic.

The preceding course of thin polymer overlay shall be cured until brooming or vacuuming can be performed without tearing or otherwise damaging the surface before the application of succeeding courses. No traffic or equipment shall be permitted on the overlay surface during the curing period.

After the curing period, all loose aggregate shall be removed by brooming or vacuuming before the next overlay course is applied. This procedure is repeated until the minimum overlay thickness is achieved.

Unless otherwise specified, the thin polymer overlay courses may be applied over the expansion joints and joint seals of the bridge deck. The expansion joints and joint seals shall be protected by a bond breaker. Before opening any application to traffic, the overlay over each joint shall be removed.

Before opening to traffic, at least one pull-off test location per lane, per 100 feet (30 m) of bridge length will be designated by the Engineer. Pull-off testing shall be performed according to the Illinois

Pull-off Test (Overlay Method). The Contractor shall provide the test equipment. Each test shall have a minimum strength of 150 psi (1,000 kPa). Unacceptable test results will require removal and replacement of the overlay at the Contractor's expense, and the locations will be determined by the Engineer.
The thickness of the overlay shall be verified to be at least 1/4 inch (6 mm) thick, as measured from the deck surface to the top of the resin. Cores from pull-off tests shall be used to determine overlay thickness. Thin areas shall be re-coated and re-tested at no additional cost to the Department.

If additional applications are required due to deficient thickness or insufficient aggregate, the Engineer may require additional pull-off strength tests to verify the Contractor's procedures.

Pull-off test locations, thickness test locations, and any de-bonded areas shall be repaired before final acceptance.

(2) Curing. The Contractor shall plan and prosecute the work to provide at least eight hours of curing or the minimum cure as prescribed by the manufacturer before opening that section to public or construction traffic.

(3) Storage and Handling. Resin materials shall be stored in their original containers inside a heated warehouse in a dry area. Storage temperatures shall be maintained between 60 – 90°F (16 – 32°C).

The resin material shall be stored on the job site in a trailer, protected from moisture, and maintained within a temperature range of 60 – 90°F (16 – 32°C).

Protective gloves and goggles shall be provided by the Contractor to workers who are directly exposed to the resin material. Product Safety Data Sheets from the manufacturer shall be provided for all workers by the Contractor.

All aggregates shall be stored in a dry environment and shall be protected from contaminants on the job site. Aggregate that is exposed to rain or other moisture shall be rejected.

Method of Measurement. The area of scarification on the bridge deck will be measured for payment in square yards (square meters).

The area of thin polymer overlay will be measured in square yards (square meters) of horizontal deck area, completed and accepted.

Basis of Payment. This work shall be paid for at the contract unit price per square yard (square meter) for BRIDGE DECK THIN POLYMER OVERLAY of the thickness specified.

The concrete bridge deck scarification will be paid for at the contract unit price per square yard (square meter) for BRIDGE DECK SCARIFICATION of the thickness specified.

WASHOUT BASIN
Update: 03/23/2023

Description: The WASHOUT BASIN(s) as identified and approved by the Engineer prior to construction are used to contain concrete liquids when the chutes of concrete trucks are rinsed out after the delivery of concrete to the construction site. These washout facilities function to consolidate soils for disposal and prevent runoff liquids associated with concrete.

General Requirements:

- The Contractor must submit a plan of his/her proposed temporary concrete washout facility to the Engineer for his/her approval ***at least 10 days prior*** to the first concrete pour.
- Temporary concrete washout facilities are to be in place prior to any delivery of concrete to the construction site.
- Temporary concrete washout facilities are to be located at least 50 feet from storm drain inlets, open drainage facilities, or water bodies. Each facility is to be located away from construction traffic or access areas to prevent disturbance or tracking.
- A sign is to be installed adjacent to each temporary concrete washout facility to inform concrete equipment operations of the designated washout facility.

Design:

The type of concrete washout facilities available for use on this project (unless otherwise approved):

Prefabricated non-portable facilities (as approved by the Engineer)

Non-portable facilities:

- **Above Grade:** Constructed using barrier wall & polyethylene sheeting. Barrier walls are constructed to create a berm with a single sheet of 10-mil polyethylene sheeting which is free of holes, tears, or other defects which may compromise the impermeability of the material. Sandbags are used to hold the sheeting in place on top of the berm. Sheeting must extend over the entire basin and berm to prevent escape of discharge.
- **Below Grade:** Constructed via excavation and the use of polyethylene sheeting and sandbags. A pit is first excavated in a designated location with a single sheet of 10-mil polyethylene sheeting which is free of holes, tears, or other defects, which may compromise the impermeability of the material. Sandbags are then used to hold the sheeting in place.

Size of Washouts:

Number and size of washout facility is to be determined by the Contractor. It is his/her responsibility to provide enough storage for the excess concrete and water produced on the target. Non-portable facilities are to have a minimum length and width of 10'.

Inspection/Maintenance/Removal:

- Temporary concrete washout facilities are to be inspected by the Engineer during his/her weekly erosion and sediment control inspection. The inspector is to ensure there are no leaks, spills, and the capacity of the facility has not yet been compromised.
- Any overflowing of the washout facility onto the ground must be cleaned up and removed within 24 hours of discovery.
- If any rain, snow or extreme weather event is forecasted, a non-collapsing, non-water collecting cover shall be placed over the washout facility and secured to prevent accumulation and overflow of precipitation.
- Contents of each facility are not to exceed 75% of design capacity. If contents reach 75% capacity, discontinue pouring concrete into the facility until it has been cleaned out.
- Allow slurry to evaporate or remove the site in a safe manner (i.e. vacuum truck). All hardened material can then be removed or disposed of properly.
- If a lined basin is used, immediately replace the liner if it becomes damaged.
- Remove temporary concrete washout facilities when they are no longer required and restore the disturbed areas to their original condition.

Basis of Payment:

This work shall be paid for at the contract unit price lump sum for WASHOUT BASIN, which price shall be payment in full for all material, labor, excavation, disposal and restoration of <u>all basins</u> to be utilized for this contract.

CONTRACTORS DAILY NOTIFICATION
Revised: 03/15/2023

The Contractor shall notify the Engineer and /or his designated representative prior to the beginning of each day's work as to the location and type of work that is scheduled to be performed that day. The Contractor's notification shall be ***at least 48 hours prior*** to the day of actual work.

BARRICADES, TYPE II (SPECIAL)
Revised: 5/6/2025

When construction operations result in a temporary drop-off at the edge of pavement of three inches or greater, Type II Barricades (see standard 701901) shall be erected next to the edge of the pavement. At all times these barricades shall be restrained by a minimum of *two weighted sandbags*, one across each bottom rail. Barricades shall be placed at a maximum spacing of 100 feet or as directed by the engineer. Barricades shall remain in place until the aggregate shoulder is placed next to the lane edge. To ensure that barricades are placed for the shortest duration possible, the shoulder placement operation shall be completed within 2 working days after completion of the HMA Surface Course. Adverse weather and/or high winds may require additional sand bagging for all barricades.

The locations and limits for the Type II Barricades on all roads shall be as directed by the engineer. At Curb and Gutter Removal and Replacement locations, or where as directed by the Engineer, 54-inch tall Type II Barricades shall be provided in order to meet the required 36-inch reflective height standard above the top of roadway surface elevation.

Barrels will only be allowed at locations previously approved by the Engineer.

Traffic Control Devices will only be paid for when they are actively used as part of Traffic Control and Protection of this contract.

Type A Flashing Lights shall be provided in accordance with Section 701.16 of the IDOT Standard Specifications and as specified herein, unless otherwise directed by the Engineer.

Basis of Payment: This work shall be included in the contract lump sum price for TRAFFIC CONTROL AND PROTECTION (SPECIAL), which price shall include all labor, material, and equipment necessary to complete the work described above.

PROGRESS SCHEDULE
Time is of the essence in this Contract. It may be necessary for the Contractor to work longer hours or use additional crews in order to complete the work within the required time limits. The Contractor shall submit a bar graph progress schedule for the Engineer's approval before the work can be started.

The schedule shall be based on an anticipated start date and for the project completion date as identified in the special provision for "START AND COMPLETION DATE".

REMOVE EXISTING SIGNS
The Contractor shall remove or cover, and reinstall at the end of the work any signs that conflict or interfere with the work. This shall be considered included in the cost of work being performed.

INDEX
FOR
SUPPLEMENTAL SPECIFICATIONS
AND RECURRING SPECIAL PROVISIONS

Adopted January 1, 2026

This index contains a listing of SUPPLEMENTAL SPECIFICATIONS, frequently used RECURRING SPECIAL PROVISIONS, and LOCAL ROADS AND STREETS RECURRING SPECIAL PROVISIONS.

ERRATA Standard Specifications for Road and Bridge Construction
(Adopted 1-1-22) (Revised 1-1-26)

SUPPLEMENTAL SPECIFICATIONS

Std. Spec. Sec.		Page No.
109	Measurement and Payment	1
202	Earth and Rock Excavation	2
204	Borrow and Furnished Excavation	3
207	Porous Granular Embankment	4
211	Topsoil and Compost	5
214	Grading and Shaping Ditches	6
406	Hot-Mix Asphalt Binder and Surface Course	7
407	Hot-Mix Asphalt Pavement (Full-Depth)	9
420	Portland Cement Concrete Pavement	10
502	Excavation for Structures	11
504	Precast Concrete Structures	12
509	Metal Railings	13
522	Retaining Walls	14
540	Box Culverts	15
542	Pipe Culverts	35
550	Storm Sewers	44
586	Granular Backfill for Structures	51
601	Pipe Drains, Pipe Underdrains, and French Drains	52
630	Steel Plate Beam Guardrail	53
632	Guardrail and Cable Road Guard Removal	54
644	High Tension Cable Median Barrier	55
665	Woven Wire Fence	56
701	Work Zone Traffic Control and Protection	57
781	Raised Reflective Pavement Markers	59
782	Reflectors	60
801	Electrical Requirements	62
821	Roadway Luminaires	65
1003	Fine Aggregates	66
1004	Coarse Aggregates	67
1010	Finely Divided Minerals	69
1020	Portland Cement Concrete	70
1030	Hot-Mix Asphalt	73
1040	Drain Pipe, Tile, and Wall Drain	74
1042	Precast Concrete Products	75
1061	Waterproofing Membrane System	76

1067 Luminaire 77
1097 Reflectors 84
1102 Hot-Mix Asphalt Equipment 85

Illinois Department of Transportation

Check Sheet for Recurring Special Provisions

Local Public Agency	County	Section Number
Kane County Division of Transportation	Kane	26-00176-06-BR

☐ **Check this box for lettings prior to 01/01/2026**

The Following Recurring Special Provisions Indicated By An "X" Are Applicable To This Contract And Are Included By Reference:

Recurring Special Provisions

Check Sheet #			Page No.
1	☐	Additional State Requirements for Federal-Aid Construction Contracts	87
2	☐	Subletting of Contracts (Federal-Aid Contracts)	90
3	☐	EEO	91
4	☐	Specific EEO Responsibilities Non Federal-Aid Contracts	101
5	☐	Required Provisions - State Contracts	106
6	☐	Asbestos Bearing Pad Removal	112
7	☐	Asbestos Waterproofing Membrane and Asbestos HMA Surface Removal	113
8	☐	Temporary Stream Crossings and In-Stream Work Pads	114
9	☐	Construction Layout Stakes	115
10	☐	Use of Geotextile Fabric for Railroad Crossing	118
11	☐	Subsealing of Concrete Pavements	120
12	☐	Hot-Mix Asphalt Surface Correction	124
13	☐	Pavement and Shoulder Resurfacing	126
14	☐	Patching with Hot-Mix Asphalt Overlay Removal	127
15	☐	Polymer Concrete	129
16	☐	Reserved	131
17	☐	Bicycle Racks	132
18	☐	Temporary Portable Bridge Traffic Signals	134
19	☐	Nighttime Inspection of Roadway Lighting	136
20	☐	English Substitution of Metric Bolts	137
21	☐	Calcium Chloride Accelerator for Portland Cement Concrete	138
22	☐	Quality Control of Concrete Mixtures at the Plant	139
23	☐	Quality Control/Quality Assurance of Concrete Mixtures	147
24	☐	Reserved	163
25	☐	Reserved	164
26	☐	Temporary Raised Pavement Markers	165
27	☐	Restoring Bridge Approach Pavements Using High-Density Foam	166
28	☐	Portland Cement Concrete Inlay or Overlay	169
29	☐	Portland Cement Concrete Partial Depth Hot-Mix Asphalt Patching	173
30	☐	Longitudinal Joint and Crack Patching	176
31	☐	Concrete Mix Design - Department Provided	178
32	☐	Station Numbers in Pavements or Overlays	179

Local Public Agency	County	Section Number
Kane County Division of Transportation	Kane	26-00176-06-BR

The Following Local Roads And Streets Recurring Special Provisions Indicated By An "X" Are Applicable To This Contract And Are Included By Reference:

Local Roads And Streets Recurring Special Provisions

Check Sheet #			Page No.
LRS 1		**Reserved**	181
LRS 2	☐	Furnished Excavation	182
LRS 3	☒	Work Zone Traffic Control Surveillance	183
LRS 4	☐	Flaggers in Work Zones	184
LRS 5	☒	Contract Claims	185
LRS 6	☐	Bidding Requirements and Conditions for Contract Proposals	186
LRS 7	☐	Bidding Requirements and Conditions for Material Proposals	192
LRS 8		**Reserved**	198
LRS 9	☐	Bituminous Surface Treatments	199
LRS 10		**Reserved**	203
LRS 11	☒	Employment Practices	204
LRS 12	☒	Wages of Employees on Public Works	206
LRS 13	☒	Selection of Labor	208
LRS 14	☐	Paving Brick and Concrete Paver Pavements and Sidewalks	209
LRS 15	☒	Partial Payments	212
LRS 16	☐	Protests on Local Lettings	213
LRS 17	☒	Substance Abuse Prevention Program	214
LRS 18	☐	Multigrade Cold Mix Asphalt	215
LRS 19	☐	Reflective Crack Control Treatment	216

BDE SPECIAL PROVISIONS
For the July 31 and September 18, 2026 Lettings

The following special provisions indicated by a “check mark” are applicable to this contract and will be included by the Project Coordination and Implementation Section of the Bureau of Design & Environment (BDE).

File Name	#		Special Provision Title	Effective	Revised
80099	1	☐	Accessible Pedestrian Signals (APS)	April 1, 2003	Jan. 1, 2022
80274	2	☐	Aggregate Subgrade Improvement	April 1, 2012	April 1, 2022
80192	3	☐	Automated Flagger Assistance Devices	Jan. 1, 2008	April 1, 2023
80173	4	☐	Bituminous Materials Cost Adjustments	Nov. 2, 2006	Aug. 1, 2017
80426	5	☐	Bituminous Surface Treatment with Fog Seal	Jan. 1, 2020	April 1, 2026
80475	6	☐	Bridge Deck Concrete Overlays	Jan. 1, 2026	
* 80241	7	☐	Bridge Demolition Debris	July 1, 2009	
* 5053I	8	☐	Building Removal	Sept. 1, 1990	Aug. 1, 2022
* 5026I	9	☐	Building Removal with Asbestos Abatement	Sept. 1, 1990	Aug. 1, 2022
80460	10	☑	Cement, Finely Divided Minerals, Admixtures, Concrete, and Mortar	Jan. 1, 2025	Jan. 1, 2026
80384	11	☑	Compensable Delay Costs	June 2, 2017	April 1, 2019
* 80198	12	☐	Completion Date (via calendar days)	April 1, 2008	
* 80199	13	☐	Completion Date (via calendar days) Plus Working Days	April 1, 2008	
80461	14	☐	Concrete Barrier	Jan. 1, 2025	
80453	15	☐	Concrete Sealer	Nov. 1, 2023	
80261	16	☑	Construction Air Quality – Diesel Retrofit	June 1, 2010	Jan. 1, 2025
80476	17	☐	Deck Slab Repair	Jan. 1, 2026	
* 80029	18	☐	Disadvantaged Business Enterprise Participation	Sept. 1, 2000	Jan. 2, 2025
80467	19	☐	Erosion Control Blanket	Aug. 1, 2025	
80229	20	☐	Fuel Cost Adjustment	April 1, 2009	Aug. 1, 2017
80452	21	☐	Full Lane Sealant Waterproofing System	Nov. 1, 2023	
80433	22	☐	Green Preformed Thermoplastic Pavement Markings	Jan. 1, 2021	Jan. 1, 2022
80471	23	☐	Guardrail	Nov. 1, 2025	
80472	24	☐	High Friction Surface Treatment	Nov. 1, 2025	
80456	25	☐	Hot-Mix Asphalt	Jan. 1, 2024	April 1, 2026
80446	26	☐	Hot-Mix Asphalt - Longitudinal Joint Sealant	Nov. 1, 2022	Aug. 1, 2023
80438	27	☐	Illinois Works Apprenticeship Initiative – State Funded Contracts	June 2, 2021	April 2, 2024
80483	28	☐	Inlet Filters	April 1, 2026	
80477	29	☐	Longitudinal Tining	Jan. 1, 2026	July 1, 2026
80450	30	☐	Mechanically Stabilized Earth Retaining Walls	Aug. 1, 2023	Aug. 1, 2025
80478	31	☐	Modified Longitudinal Construction Joint	Jan. 1, 2026	
80464	32	☐	Pavement Marking	April. 1, 2025	Nov. 1, 2025
80468	33	☐	Pavement Patching	Aug. 1, 2025	
80441	34	☐	Performance Graded Asphalt Binder	Jan. 1, 2023	
80459	35	☐	Preformed Plastic Pavement Marking	June 2, 2024	
* 3426I	36	☐	Railroad Protective Liability Insurance	Dec. 1, 1986	Jan. 1, 2022
80473	37	☐	Raised Reflective Pavement Markers	Nov. 1, 2025	
80455	38	☑	Removal and Disposal of Regulated Substances	Jan. 1, 2024	April 1, 2026
80474	39	☐	Residential Driveway Temporary Signal	Nov. 1, 2025	
80445	40	☐	Seeding	Nov. 1, 2022	July 1, 2026
80457	41	☐	Short Term and Temporary Pavement Markings	April 1, 2024	April 2, 2024
80462	42	☐	Sign Panels and Appurtenances	Jan. 1, 2025	Jan. 1, 2026
80479	43	☐	Sinusoidal Rumble Strips	Jan. 1, 2026	
80469	44	☐	Slope Wall	Aug. 1, 2025	
80448	45	☐	Source of Supply and Quality Requirements	Jan. 2, 2023	Jan. 1, 2026
80340	46	☐	Speed Display Trailer	April 2, 2014	Jan. 1, 2022
80127	47	☐	Steel Cost Adjustment	April 2, 2004	Nov. 1, 2025
80480	48	☐	Structural Repair of Concrete	Jan. 1, 2026	
80397	49	☐	Subcontractor and DBE Payment Reporting	April 2, 2018	
80391	50	☐	Subcontractor Mobilization Payments	Nov. 2, 2017	April 1, 2019
80463	51	☐	Submission of Bidders List Information	Jan. 2, 2025	Mar. 2, 2025

	80482	52	☐	Submission of Payroll Records – Federal Aid Contract	April 1, 2026	
	80437	53	☐	Submission of Payroll Records – State Contract	April 1, 2021	April 1, 2026
	80435	54	☐	Surface Testing of Pavements – IRI	Jan. 1, 2021	Jan. 1, 2023
	80465	55	☐	Surveying Services	April 1, 2025	
	80481	56	☐	Temporary Concrete Barrier	Jan. 1, 2026	
	80466	57	☐	Temporary Rumble Strips	April 1, 2025	
	80484	58	☐	Tolerance in Thickness for Continuously Reinforced PCC Pavement	July 1, 2026	
	80470	59	☐	Traffic Signal Backplate	Aug. 1, 2025	
*	20338	60	☐	Training Special Provisions	Oct. 15, 1975	Sept. 2, 2021
	80429	61	☐	Ultra-Thin Bonded Wearing Course	April 1, 2020	Jan. 1, 2022
	80439	62	☑	Vehicle and Equipment Warning Lights	Nov. 1, 2021	Nov. 1, 2022
	80458	63	☐	Waterproofing Membrane System	Aug. 1, 2024	
	80302	64	☐	Weekly DBE Trucking Reports	June 2, 2012	Jan. 2, 2025
	80454	65	☐	Wood Sign Support	Nov. 1, 2023	
	80427	66	☑	Work Zone Traffic Control Devices	Mar. 2, 2020	Jan. 1, 2026
	80485	67	☐	Work Zone Width Restriction	July 1, 2026	
*	80071	68	☐	Working Days	Jan. 1, 2002	

Highlighted items indicate a new or revised special provision for the letting.

An * indicates the special provision requires additional information from the designer, which needs to be submitted separately. The Project Coordination and Implementation Section will then include the information in the applicable special provision.

The following special provisions are in the 2026 Supplemental Specifications and Recurring Special Provisions.

File Name	Special Provision Title	New Location(s)	Effective	Revised
80447	Grading and Shaping Ditches	Articles 214.03 & 214.04	Jan. 1, 2023	

CEMENT, FINELY DIVIDED MINERALS, ADMIXTURES, CONCRETE, AND MORTAR (BDE)

Effective: January 1, 2025
Revised: January 1, 2026

Revise the first paragraph of Article 285.05 of the Standard Specifications to read:

"**285.05 Fabric Formed Concrete Revetment Mat.** The grout shall consist of a mixture of cement, fine aggregate, and water so proportioned and mixed as to provide a pumpable slurry. Fly ash or ground granulated blast furnace (GGBF) slag, and concrete admixtures may be used at the option of the Contractor. The grout shall have an air content of not less than 6.0 percent nor more than 9.0 percent of the volume of the grout. The mix shall obtain a compressive strength of 2500 psi (17,000 kPa) at 28 days according to Article 1020.09."

Revise Article 302.02 of the Standard Specifications to read:

"**302.02 Materials.** Materials shall be according to the following.

	Item	Article/Section
(a)	Cement	1001
(b)	Water	1002
(c)	Hydrated Lime	1012.01
(d)	By-Product, Hydrated Lime	1012.02
(e)	By-Product, Non-Hydrated Lime	1012.03
(f)	Lime Slurry	1012.04
(g)	Fly Ash	1010
(h)	Soil for Soil Modification (Note 1)	1009.01
(i)	Bituminous Materials (Note 2)	1032

Note 1. This soil requirement only applies when modifying with lime (slurry or dry).

Note 2. The bituminous materials used for curing shall be emulsified asphalt RS-2, CRS-2, HFE 90, or HFE 150; rapid curing liquid asphalt RC-70; or medium curing liquid asphalt MC-70 or MC-250."

Revise Article 312.07(c) of the Standard Specifications to read:

"(c) Cement ..... 1001"

Add Article 312.07(i) of the Standard Specifications to read:

"(i) Ground Granulated Blast Furnace (GGBF) Slag ..... 1010"

Revise the first paragraph of Article 312.09 of the Standard Specifications to read:

"**312.09 Proportioning and Mix Design.** At least 60 days prior to start of placing CAM II, the Contractor shall submit samples of materials to be used in the work for proportioning and testing. The mixture shall contain a minimum of 200 lb (120 kg) of cement per cubic yard (cubic meter). Cement may be replaced with fly ash or ground granulated blast furnace (GGBF) slag according to Article 1020.05(c)(1) or 1020.05(c)(2), respectively, however the minimum cement content in the mixture shall be 170 lbs/cu yd (101 kg/cu m). Blends of coarse and fine aggregates will be permitted, provided the volume of fine aggregate does not exceed the volume of coarse aggregate. The Engineer will determine the proportions of materials for the mixture according to the "Portland Cement Concrete Level III Technician Course" manual. However, the Contractor may substitute their own mix design. Article 1020.05(a) shall apply, and a Level III PCC Technician shall develop the mix design."

Revise Article 352.02 of the Standard Specifications to read:

"**352.02 Materials.** Materials shall be according to the following.

Item	Article/Section
(a) Cement (Note 1)	1001
(b) Soil for Soil-Cement Base Course	1009.03
(c) Water	1002
(d) Bituminous Materials (Note 2)	1032

Note 1. Bulk cement may be used for the traveling mixing plant method if the equipment for handling, weighing, and spreading the cement is approved by the Engineer.

Note 2. The bituminous materials used for curing shall be emulsified asphalt RS-2, CRS-2, HFE 90, or HFE 150; rapid curing liquid asphalt RC-70; or medium curing liquid asphalt MC-70 or MC-250."

Revise Article 404.02 of the Standard Specifications to read:

"**404.02 Materials.** Materials shall be according to the following.

Item	Article/Section
(a) Cement	1001
(b) Water	1002
(c) Fine Aggregate	1003.08
(d) Bituminous Material (Tack Coat)	1032.06
(e) Emulsified Asphalts (Note 1) (Note 2)	1032.06
(f) Fiber Modified Joint Sealer	1050.05
(g) Additives (Note 3)	

Note 1. When used for slurry seal, the emulsified asphalt shall be CQS-1h according to Article 1032.06(b).

Note 2. When used for micro-surfacing, the emulsified asphalt shall be CQS-1hP according to Article 1032.06(e).

Note 3. Additives may be added to the emulsion mix or any of the component materials to provide the control of the quick-traffic properties. They shall be included as part of the mix design and be compatible with the other components of the mix.

Revise the last sentence of the fourth paragraph of Article 404.08 of the Standard Specifications to read:

"When approved by the Engineer, the sealant may be dusted with fine sand, cement, or mineral filler to prevent tracking."

Revise Note 2 of Article 516.02 of the Standard Specifications to read:

"Note 2. The sand-cement grout mix shall be according to Section 1020 and shall be a 1:1 blend of sand and cement comprised of a Type I, IL, or II cement at 185 lb/cu yd (110 kg/cu m). The maximum water cement ratio shall be sufficient to provide a flowable mixture with a typical slump of 10 in. (250 mm)."

Revise Note 2 of Article 543.02 of the Standard Specifications to read:

"Note 2. The grout mixture shall be 6.50 hundredweight/cu yd (385 kg/cu m) of cement plus fine aggregate and water. Fly ash or ground granulated blast furnace (GGBF) slag may replace a maximum of 5.25 hundredweight/cu yd (310 kg/cu m) of the cement. The water/cement ratio, according to Article 1020.06, shall not exceed 0.60. An air-entraining admixture shall be used to produce an air content, according to Article 1020.08, of not less than 6.0 percent nor more than 9.0 percent of the volume of the grout. The Contractor shall have the option to use a water-reducing or high range water-reducing admixture."

Revise Article 583.01 of the Standard Specifications to read:

"**583.01 Description.** This work shall consist of placing cement mortar along precast, prestressed concrete bridge deck beams as required for fairing out any unevenness between adjacent deck beams prior to placing of waterproofing membrane and surfacing."

Revise Article 583.02(a) of the Standard Specifications to read:

"(a) Cement .....1001"

Revise the first paragraph of Article 583.03 of the Standard Specifications to read:

"**583.03 General.** This work shall only be performed when the air temperature is 45 °F (7 °C) and rising. The mixture for cement mortar shall consist of three parts sand to one part cement by volume. The amount of water shall be no more than that necessary to produce a workable, plastic mortar."

Revise Article 606.02(h) of the Standard Specifications to read:

"(h) Fibers (Note 1) .....1014"

Revise Note 1 in Article 606.02(h) of the Standard Specifications to read:

"Note 1. Fibers, when required, shall only be used in the concrete mixture for slipform applications."

Revise the third paragraph in Article 606.10 of the Standard Specifications to read:

"Welded wire fabric shall be 6 x 6 in. (150 x 150 mm) mesh, #4 gauge (5.74 mm), 58 lb (26 kg) per 100 sq ft (9 sq m)."

Revise Article 1001.01(d) of the Standard Specifications to read:

"(d) Rapid Hardening Cement. Rapid hardening cement shall be according to the Bureau of Materials Policy Memorandum "Portland or Blended Cement Acceptance Procedure for Qualified and Non-Qualified Plants", and ASTM C 1600, Type URH, Type VRH, or Type RH-CAC. It shall be used according to Article 1020.04 or when approved by the Engineer. The Contractor shall submit a report from the manufacturer or an independent lab that contains results for testing according to ASTM C 1600 which shows the cement meets the requirements of either Type URH, Type VRH, or Type RH-CAC. Test data shall be less than 1 year old from the date of submittal.

Revise Article 1001.01(e) of the Standard Specifications to read:

"(e) Other Cements. Other cements shall be according to the Bureau of Materials Policy Memorandum "Portland or Blended Cement Acceptance Procedure for Qualified and Non-Qualified Plants", and ASTM C 1157 or ASTM C 1600, as applicable. Other cements shall be used according to Article 1020.04 or when approved by the Engineer. For cements according to ASTM C 1157, the Contractor shall submit a report from the manufacturer or an independent lab that contains results of tests which shows the cement meets the requirements Type GU, HE, MS, MH, or LH. For cements according to ASTM C 1600, the Contractor shall submit a report from the manufacturer or an independent lab that contains results of tests which shows the cement meets the requirements Type MRH or GRH. Test data shall be less than 1 year old from the date of submittal."

Revise Article 1002.02 of the Standard Specifications to read:

"**1002.02 Quality**. Water used with cement in concrete or mortar and water used for curing concrete shall be clean, clear, and free from sugar. In addition, water shall be tested and evaluated for acceptance according to one of the following options.

OPTION 1.

(a) Acceptable limits for acidity and alkalinity when tested according to ITP T 26.

(1) Acidity -- 0.1 Normal NaOH ..... 2 ml max.*
(2) Alkalinity -- 0.1 Normal HCl..... 10 ml max.*
*To neutralize 200 ml sample.

(b) Acceptable limits for solids when tested according to the following.

(1) Organic (ITP T 26)..... 0.02% max.
(2) Inorganic (ITP T 26)..... 0.30% max.
(3) Sulfate (SO4) (ASTM D 516-82) ..... 0.05% max.
(4) Chloride (ASTM D 512) ..... 0.06% max.

(c) The following tests shall be performed on the water sample and on deionized water. The same cement and sand shall be used for both tests.

(1) Unsoundness (ASTM C 151).
(2) Initial and Final Set Time (ASTM C 266).
(3) Strength (ASTM C 109).

The test results for the water sample shall not deviate from the test results for the deionized water, except as allowed by the precision in the test method.

OPTION 2. Water shall meet the requirements ASTM C 1602 Tables 1 and 2 as outlined in Sections 5.1, 5.2, and 5.4."

Revise Note 2/ in Article 1003.01(b) of the Standard Specifications to read:

"2/ Applies only to sand. Sand exceeding the colorimetric test standard of 11 (Illinois Modified AASHTO T 21) will be checked for mortar making properties according to Illinois Modified ASTM C 87 and shall develop a compressive strength at the age of 14 days when using Type I, IL, or II cement of not less than 95 percent of the comparable standard.

Revise the second sentence of Article 1003.02(e)(1) of the Standard Specifications to read:

"The test will be performed with Type I, IL, or II portland cement having a total equivalent alkali content ($Na_2O + 0.658K_2O$) of 0.90 percent or greater."

Revise the first sentence of the second paragraph of Article 1003.02(e)(3) of the Standard Specifications to read:

"The ASTM C 1293 test shall be performed with Type I, IL, or II portland cement having a total equivalent alkali content ($Na_2O + 0.658K_2O$) of 0.80 percent or greater."

Revise the second sentence of Article 1004.02(g)(1) of the Standard Specifications to read:

"The test will be performed with Type I, IL, or II portland cement having a total equivalent alkali content ($Na_2O + 0.658K_2O$) of 0.90 percent or greater."

Add the following Section to the Standard Specifications.

"**SECTION 1014. FIBERS FOR CONCRETE**

1014.01 General. Fibers used in concrete shall be Type II or Type III (polyolefin or carbon) according to ASTM C 1116. The testing required for Type II fibers or Type III polyolefin fibers shall be performed by an independent lab a minimum of once every five years, and the test results provided to the Department. Manufacturers of Type III carbon fibers shall provide materials certification documentation not more than 6 years old a minimum of once every 5 years to the Department. The Department will maintain a qualified product list. The method of inclusion of fibers into concrete mixtures shall be according to the manufacturer's specifications.

At the discretion of the Engineer, the concrete mixture shall be evaluated in a field demonstration for fiber clumping, ease of placement, and ease of finishing. The field demonstration shall consist of a minimum 2 cu yd (1.5 cu m) trial batch placed in a 12 ft x 12 ft (3.6 m x 3.6 m) slab.

1014.02 Concrete Gutter, Curb, Median and Paved Ditch. Fibers shall be Type III. Fibers shall have a minimum length of 1/2 in. (13 mm) and a maximum length of 0.75 in. (19 mm). The maximum dosage rate in the concrete mixture shall not exceed 1.5 lb/cu yd (0.9 kg/cu m). The minimum dosage rate shall be per the manufacturer's recommendation.

1014.03 Concrete Inlay or Overlay. Fibers shall be Type III. Fibers shall have a minimum length of 1.0 in. (25 mm), a maximum length of 2 1/2 in. (63 mm), and a maximum aspect ratio (length divided by the equivalent diameter of the fiber) of 150. The maximum dosage rate shall not exceed 5.0 lb/cu yd (3.0 kg/cu m). The minimum dosage rate shall be per the manufacturer's recommendation.

1014.04 Bridge Deck Fly Ash, Ground Granulated Blast Furnace (GGBF) Slag, High Reactivity Metakaolin, or Microsilica (Silica Fume) Concrete Overlay. Fibers shall be Type III. The dosage rate shall be a minimum of 3.0 lb/cu yd (1.8 kg/cu m), unless a field demonstration according to Article 1014.01 indicates that a lower dosage rate is necessary. Based on the results of the field demonstration, the Department has the option to reduce the dosage rate of fibers, but the dosage will not be reduced to less than 2.0 lb / cu yd (1.2 kg/cu m).

1014.05 Bridge Deck Latex Concrete Overlay. Fibers shall be Type II or III. Fibers shall have a minimum length of 0.75 in. (19 mm), a maximum length of 1.75 in. (45 mm), and an aspect ratio (length divided by the equivalent diameter of the fiber) of between 70 and 100. The dosage rate shall be a minimum of 3.0 lb/cu yd (1.8 kg/cu m), unless a field demonstration according to Article 1014.01 indicates that a lower dosage rate is necessary. Based on the results of the field

demonstration, the Department has the option to reduce the dosage rate of fibers, but the dosage will not be reduced to less than 2.0 lb/cu yd (1.2 kg/cu m)."

Add the following Section to the Standard Specifications:

"**SECTION 1015. HIGH PERFORMANCE SHOTCRETE**

1015.01 Packaged Shotcrete With Aggregate. The packaged shotcrete with aggregate shall be a pre-blended dry combination of materials for the wet-mix shotcrete method according to ASTM C 1480, Type FA or CA, Grade FR, Class I. The fibers shall be Type III according to Article 1014.01. The cement and finely divided minerals in the mixture shall be a minimum 6.65 cwt/cu yd (395 kg/cu m), and the portland cement shall not be below 4.70 cwt/cu yd (279 kg/cu m). Microsilica is required in the mixture and shall be a minimum of 5 percent by weight (mass) of cementitious material, and a maximum of 10 percent. Strength requirements shall be according to ASTM C 1480 except that the strength at 28 days shall be at least 4000 psi (27,500 kPa). Strength testing shall be according to ASTM C 1140. The air content as shot shall be 4.0 – 8.0 percent when tested according to AASHTO T 152, and the coarse aggregate shall be a maximum size of 1/2 in. (12.5 mm).

The packaged shotcrete shall have a water soluble chloride ion content of less than 0.15% by weight of cementitious material when tested according to ASTM C 1218 or AASHTO T 260.

The testing according to ASTM C 1480, ASTM C 1140, AASHTO 152, and ASTM C 1218 or AASHTO T 260 shall be performed by an independent lab a minimum of once every 5 years, and the test results shall be provided to the Department. The Department will maintain a qualified product list. Batching and mixing shall be per the manufacturer's recommendations.

1015.02 Packaged Shotcrete Without Aggregate. The packaged shotcrete that does not include pre-blended aggregate shall be according to Article 1015.01, except the added aggregate shall be according to Articles 1003.02 and 1004.02. The aggregate gradation shall be according to the manufacturer. The Department will maintain a qualified product list. Batching and mixing shall be per the manufacturer's recommendations."

Revise Section 1017 of the Standard Specifications to read:

"SECTION 1017. PACKAGED, DRY, COMBINED MATERIALS FOR MORTAR AND CONCRETE

1017.01 Mortar. The mortar shall be high-strength according to ASTM C 387 and shall have a minimum 80.0 percent relative dynamic modulus of elasticity when tested according to AASHTO T 161. For prestressed concrete applications, the mortar shall have a water-soluble chloride ion content of less than 0.06 percent by weight of cementitious material when tested according to ASTM C 1218 or AASHTO T 260; and for non-prestressed concrete applications, the water soluble chloride content shall be less than 0.15 percent by weight of cementitious material. The testing according to ASTM C 387, AASHTO T 161, and either ASTM C 1218 or AASHTO T 260 shall be performed by an independent lab a minimum of once every five years, and the test results

shall be provided to the Department. The Department will maintain a qualified product list. Mixing of the high-strength mortar shall be according to the manufacturer's specifications.

1017.02 Concrete. The materials, testing, and preparation of aggregate for the "high slump" packaged concrete mixture shall be according to ASTM C 387. The mixture shall be air entrained, the slump shall be 5-10 in. (125-250 mm), and the coarse aggregate shall be a maximum size of 1/2 in. (12.5 mm). Strength requirements shall be according to ASTM C 387 except that the strength at 28 days shall be at least 4000 psi (27,500 kPa). The "high slump" packaged concrete mixture shall have a water soluble chloride ion content of less than 0.15% by weight of cementitious material when tested according to ASTM C 1218 or AASHTO T 260. The testing according to ASTM C 387, and either ASTM C 1218 or AASHTO T 260 shall be performed by an independent lab a minimum of once every 5 years, and the test results shall be provided to the Department. The Department will maintain a qualified product list. Mixing shall be per the manufacturer's recommendations.

1017.02 Self-Consolidating Concrete. The materials, testing, and preparation of aggregate for the "self-consolidating concrete" packaged concrete mixture shall be according to ASTM C 387. The mixture shall be air entrained, it should be uniformly graded, and the coarse aggregate shall be a maximum size of 1/2 in. (12.5 mm). Strength requirements shall be according to ASTM C 387 except that the strength at 28 days shall be at least 4000 psi (27,500 Pa). Slump flow range shall be 22 in. (550 mm) minimum to 28 in. (700 mm) maximum when tested according to AASHTO T 347. The visual stability index shall be a maximum of 1 when tested according to AASHTO T 351. At the option of the manufacturer, either the J-Ring value shall be a maximum of 2 in. (50 mm) when tested according to AASHTO T 347 or the L-Box blocking ratio shall be a minimum of 80 percent when tested according AASHTO T 419. The hardened visual stability index shall be a maximum of 1 when tested according to AASHTO R 81.

The "self -consolidating concrete" packaged concrete mixture shall have a water soluble chloride ion content of less than 0.15 percent by weight of cementitious material when tested according to ASTM C 1218 or AASHTO T 260.

The testing according to ASTM C 387, AASHTO T 347, AASHTO T 351, AASHTO T 419, AASHTO R 81, ASTM C 1218 and AASHTO T 260 shall be performed by an independent lab a minimum of once every 5 years, and the test results shall be provided to the Department. The Department will maintain a qualified product list. Mixing shall be per the manufacturer's recommendations."

Revise Article 1018.01 of the Standard Specifications to read:

"**1018.01 Requirements.** The rapid hardening mortar or concrete shall be according to ASTM C 928 and shall have successfully completed and remain current with the AASHTO Product Eval and Audit Rapid Hardening Concrete Patching Materials (RHCP) testing program. R1, R2, or R3 concrete shall be air entrained, the slump shall be 5-10 in. (125-250 mm), and the coarse aggregate shall be a maximum size of 1/2 in. (12.5 mm). For prestressed concrete applications, the mortar or concrete shall have a water-soluble chloride ion content of less than 0.06 percent by weight of cementitious material when tested according to ASTM C 1218 or AASHTO T 260;

and for non-prestressed concrete applications, the water soluble chloride content shall be less than 0.15 percent by weight of cementitious material. The Department will maintain a qualified product list. Mixing of the mortar or concrete shall be according to the manufacturer's specifications.."

Revise Article 1019.02 of the Standard Specifications to read:

"**1019.02 Materials.** Materials shall be according to the following.

Item	Article/Section
(a) Cement	1001
(b) Water	1002
(c) Fine Aggregate for Controlled Low-Strength Material (CLSM)	1003.06
(d) Fly Ash	1010
(e) Ground Granulated Blast Furnace (GGBF) Slag	1010
(f) Admixtures (Note 1)	

Note 1. The air-entraining admixture may be in powder or liquid form. The air content produced by the admixture shall be 15-25 percent when incorporated into Mix 2 or an equivalent mixture as determined by the Department and tested according to AASHTO T 121 or AASHTO T 152. The testing according to AASHTO T 121 or AASHTO T 152 shall be performed by an independent lab a minimum of once every five years, and the test results shall be provided to the Department. The Department will maintain a qualified product list."

Revise the third paragraph of Article 1019.04 of the Standard Specifications to read:

"The Engineer will instruct the Contractor to adjust the proportions of the mix design in the field as needed to meet the design criteria, provide adequate flowability, maintain proper solid suspension, or other criteria established by the Engineer."

Revise Article 1019.05 of the Standard Specifications to read:

"**1019.05 Department Mix Design.** The Department mix design shall be Mix 1, 2, or 3 and shall be proportioned to yield approximately one cubic yard (cubic meter).

Mix 1	
Cement	50 lb (30 kg)
Fly Ash – Class C or F, and/or GGBF Slag	125 lb (74 kg)
Fine Aggregate – Saturated Surface Dry	2900 lb (1720 kg)
Water	50-65 gal (248-322 L)
Air Content	No air is entrained

Mix 2	
Cement	125 lb (74 kg)

Fine Aggregate – Saturated Surface Dry	2500 lb (1483 kg)
Water	35-50 gal (173-248 L)
Air Content	15-25 %

Mix 3	
Cement	40 lb (24 kg)
Fly Ash – Class C or F, and/or GGBF Slag	125 lb (74 kg)
Fine Aggregate – Saturated Surface Dry	2500 lb (1483 kg)
Water	35-50 gal (179-248 L)
Air Content	15-25 %"

Revise Article 1020.04, Table 1, Note (8) of the Standard Specifications to read:

"(8) In addition to the Type III portland cement, 100 lb/cu yd of ground granulated blast-furnace slag and 50 lb/cu yd of microsilica (silica fume) shall be used. For an air temperature greater than 85 ºF, the Type III portland cement may be replaced with Type I, IL, or II portland cement."

Revise Article 1020.04, Table 1 (Metric), Note (8) of the Standard Specifications to read:

"(8) In addition to the Type III portland cement, 60 kg/cu m of ground granulated blast-furnace slag and 30 kg/cu m of microsilica (silica fume) shall be used. For an air temperature greater than 30 ºC, the Type III portland cement may be replaced with Type I, IL, or II portland cement."

Revise Note 9 of Table 1 of Article 1020.04 of the Standard Specifications to read:

"(9) The cement shall be a rapid hardening according to Article 1001.01(d). Minimum or maximum cement factor may be adjusted when approved by the Engineer."

Revise the second paragraph of Article 1020.05(a) of the Standard Specifications to read:

"For a mix design using a portland-pozzolan cement, portland blast-furnace slag cement, portland-limestone cement, or replacing portland cement with finely divided minerals per Articles 1020.05(c) and 1020.05(d), the Contractor may submit a mix design with a minimum portland cement content less than 400 lbs/cu yd (237 kg/cu m), but not less than 375 lbs/cu yd (222 kg/cu m), if the mix design is shown to have a minimum relative dynamic modulus of elasticity of 80 percent determined according to AASHTO T 161. Testing shall be performed by an independent laboratory accredited by AASHTO re:source for Portland Cement Concrete."

Revise the first sentence of the first paragraph of Article 1020.05(b) of the Standard Specifications to read:

"Corrosion inhibitors and concrete admixtures shall be according to the qualified product lists."

Delete the fourth and fifth sentences of the second paragraph of Article 1020.05(b) of the Standard Specifications.

Revise Article 1020.05(b)(5) of the Standard Specifications to read:

"(5) For Class PP-4 concrete, a high range water-reducing admixture, retarder, and/or hydration stabilizer may be used in addition to the air-entraining admixture. The Contractor also has the option to use a water-reducing admixture with the high range water-reducing admixture. An accelerator shall not be used. A mobile portland cement concrete plant shall be used to produce the patching mixture.

For PP-5 concrete, a non-chloride accelerator, high range water-reducing admixture, retarder, hydration stabilizer, and/or air-entraining admixture may be used. The accelerator, high range water-reducing admixture, retarder, hydration stabilizer, and/or air-entraining admixture shall be per the Contractor's recommendation and dosage. The qualified product list of concrete admixtures shall not apply. A mobile portland cement concrete plant shall be used to produce the patching mixture."

Revise second paragraph of Article 1020.05(b)(10) of the Standard Specifications to read:

"When calcium nitrite is used, it shall be added at the rate of 4 gal/cu yd (20 L/cu m) and shall be added to the mix immediately after all compatible admixtures have been introduced to the batch. Other corrosion inhibitors shall be added per the manufacturer's specifications."

Delete the third paragraph of Article 1020.05(b)(10) of the Standard Specifications.

Revise Article 1020.15(b)(1)c. of the Standard Specifications to read:

"c. The minimum portland cement content in the mixture shall be 375 lbs/cu yd (222 kg/cu m). When the total of organic processing additions, inorganic processing additions, and limestone addition exceed 5.0 percent in the cement, the minimum portland cement content in the mixture shall be 400 lbs/cu yd (237 kg/cu m). For a drilled shaft, foundation, footing, or substructure, the minimum portland cement may be reduced to as low as 330 lbs/cu yd (196 kg/cu m) if the concrete has adequate freeze/thaw durability. The Contractor shall provide freeze/thaw test results according to AASHTO T 161, and the relative dynamic modulus of elasticity of the mix design shall be a minimum of 80 percent. Testing shall be performed by an independent laboratory accredited by AASHTO re:source for Portland Cement Concrete. Freeze/thaw testing will not be required for concrete that will not be exposed to freezing and thawing conditions as determined by the Engineer."

Revise Article 1021.01 of the Standard Specifications to read:

"**1021.01 General.** Admixtures shall be furnished in liquid or powder form ready for use. The admixtures shall be delivered in the manufacturer's original containers, bulk tank trucks or such containers or tanks as are acceptable to the Engineer. Delivery shall be accompanied by a ticket which clearly identifies the manufacturer, the date of manufacture, and trade name of the material. Containers shall be readily identifiable as to manufacturer, the date of manufacture, and trade name of the material they contain.

Concrete admixtures shall be on one of the Department's qualified product lists. Unless otherwise noted, admixtures shall have successfully completed and remain current with the AASHTO Product Eval and Audit Concrete Admixture (CADD) testing program. For admixture submittals to the Department; the product brand name, manufacturer name, admixture type or types, an electronic link to the product's technical data sheet, and the NTPEP testing number which contains an electronic link to all test data shall be provided. In addition, a letter shall be submitted certifying that no changes have been made in the formulation of the material since the most current round of tests conducted by AASHTO Product Eval and Audit. After 28 days of testing by AASHTO Product Eval and Audit, air-entraining admixtures may be provisionally approved and used on Departmental projects. For all other admixtures, unless otherwise noted, the time period after which provisionally approved status may be earned is 6 months.

The manufacturer shall include the following in the submittal to the AASHTO Product Eval and Audit CADD testing program: the manufacturing range for specific gravity, the midpoint and manufacturing range for residue by oven drying, and manufacturing range of pH. The submittal shall also include an infrared spectrophotometer trace no more than five years old.

For air-entraining admixtures according to Article 1021.02, the specific gravity allowable manufacturing range established by the manufacturer shall be according to AASHTO M 194. For residue by oven drying and pH, the allowable manufacturing range and test methods shall be according to AASHTO M 194.

For admixtures according to Articles 1021.03, 1021.04, 1021.05, 1021.06, 1021.07, and 1021.08, the pH allowable manufacturing range established by the manufacturer shall be according to ASTM E 70. For specific gravity and residue by oven drying, the allowable manufacturing range and test methods shall be according to AASHTO M 194.

All admixtures, except chloride-based accelerators, shall contain a maximum of 0.3 percent chloride by weight (mass) as determined by an appropriate test method. To verify the test result, the Department will use Illinois Modified AASHTO T 260, Procedure A, Method 1.

Prior to final approval of an admixture, the Engineer reserves the right to request a sample for testing. The test and reference concrete mixtures tested by the Engineer will contain a cement content of 5.65 cwt/cu yd (335 kg/cu m). For freeze-thaw testing, the Department will perform the test according to Illinois Modified AASHTO T 161. The flexural strength test will be performed according to AASHTO T 177. If the Engineer decides to test the admixture, the manufacturer shall submit AASHTO T 197 water content and set time test results on the standard cement used by the Department. The manufacturer may select their lab or an independent lab to perform this testing. The laboratory is not required to be accredited by AASHTO.

Random field samples may be taken by the Department to verify an admixture meets specification. A split sample will be provided to the manufacturer if requested. Admixtures that do not meet specification requirements or an allowable manufacturing range established by the manufacturer shall be replaced with new material."

Revise Article 1021.03 of the Standard Specifications to read:

"**1021.03 Retarding and Water-Reducing Admixtures.** The admixture shall be according to the following.

(a) Retarding admixtures shall be according to AASHTO M 194, Type B (retarding) or Type D (water-reducing and retarding).

(b) Water-reducing admixtures shall be according to AASHTO M 194, Type A.

(c) High range water-reducing admixtures shall be according to AASHTO M 194, Type F (high range water-reducing) or Type G (high range water-reducing and retarding)."

Revise Article 1021.05 of the Standard Specifications to read:

"**1021.05 Self-Consolidating Admixtures.** Self-consolidating admixture systems shall consist of either a high range water-reducing admixture only or a high range water-reducing admixture combined with a separate viscosity modifying admixture. The one or two component admixture system shall be capable of producing a concrete that can flow around reinforcement and consolidate under its own weight without additional effort and without segregation.

High range water-reducing admixtures shall be according to AASHTO M 194, Type F.

Viscosity modifying admixtures shall be according to AASHTO M 194, Type S (specific performance)."

Revise Article 1021.06 of the Standard Specifications to read:

"**1021.06 Rheology-Controlling Admixture.** Rheology-controlling admixtures shall be capable of producing a concrete mixture with a lower yield stress that will consolidate easier for slipform applications used by the Contractor. Rheology-controlling admixtures shall be according to AASHTO M 194, Type S (specific performance)."

Revise Article 1021.07 of the Standard Specifications to read:

"**1021.07 Corrosion Inhibitor.** The corrosion inhibitor shall be according to one of the following.

(a) Calcium Nitrite. Corrosion inhibitors shall contain a minimum 30 percent calcium nitrite by weight (mass) of solution and shall comply with either the requirements of AASHTO

M 194, Type C (accelerating) or the requirements of ASTM C 1582. The corrosion inhibiting performance requirements of ASTM C 1582 shall not apply.

(b) Other Materials. The corrosion inhibitor shall be according to ASTM C 1582.

For submittals requiring testing according to ASTM M 194, Type C (accelerating), the admixture shall meet the requirements of the AASHTO Product Eval and Audit CADD testing program according to Article 1021.01.

For submittals requiring testing according to ASTM C 1582, a report prepared by an independent laboratory accredited by AASHTO re:source for portland cement concrete shall be provided. The report shall show the results of physical tests conducted no more than five years prior to the time of submittal, according to applicable specifications. However, ASTM G 109 test information specified in ASTM C 1582 is not required to be from an independent accredited lab. All other information in ASTM C 1582 shall be from an independent accredited lab. Test data and other information required to be submitted to AASHTO Product Eval and Audit according to Article 1021.01, shall instead be submitted directly to the Department."

Add Article 1021.08 of the Standard Specifications as follows:

"**1021.08 Other Specific Performance Admixtures.** Other specific performance admixtures shall, at a minimum, be according to AASHTO M 194, Type S (specific performance). The Department also reserves the right to require other testing, as determined by the Engineer, to show evidence of specific performance characteristics.

Initial testing according to AASHTO M 194 may be conducted under the AASHTO Product Eval and Audit CADD testing program according to Article 1021.01, or by an independent laboratory accredited by AASHTO re:source for Portland Cement Concrete. In either case, test data and other information required to be submitted to AASHTO Product Eval and Audit according to Article 1021.01, shall also be submitted directly to the Department. The independent accredited lab report shall show the results of physical tests conducted no more than five years prior to the time of submittal, according to applicable specifications."

Add Article 1021.09 of the Standard Specifications as follows:

"**1021.09 Latex Admixtures**. The latex admixture shall be a uniform, homogeneous, non-toxic, film-forming, polymeric emulsion in water to which all stabilizers have been added at the point of manufacture. The latex admixture shall not contain any chlorides and shall contain 46-49 percent solids.

In lieu of meeting the requirements of Article 1021.01, the Contractor shall submit a manufacturer's certification that the latex emulsion meets the requirements of FHWA Research Report RD-78-35, Chapter VI. The certificate shall include the date of manufacture of the latex admixture, batch or lot number, quantity represented, manufacturer's name, and the location of the manufacturing plant. The latex emulsion shall be sampled and tested in accordance with RD-78-35, Chapter VII, Certification Program.

The latex admixture shall be packaged and stored in containers and storage facilities which will protect the material from freezing and from temperatures above 85°F (30°C). Additionally, the material shall not be stored in direct sunlight and shall be shaded when stored outside of buildings during moderate temperatures."

Revise Article 1024.01 of the Standard Specifications to read:

"**1024.01 Requirements for Grout.** The grout shall be proportioned by dry volume, thoroughly mixed, and shall have a minimum temperature of 50 °F (10 °C). Water shall not exceed the minimum needed for placement and finishing.

Materials for the grout shall be according to the following.

Item	Article/Section
(a) Cement	1001
(b) Water	1002
(c) Fine Aggregate	1003.02
(d) Fly Ash	1010
(e) Ground Granulated Blast Furnace (GGBF) Slag	1010
(f) Concrete Admixtures	1021"

Revise Note 1 of Article 1024.02 of the Standard Specifications to read:

"Note 1. Nonshrink grout shall be according to ASTM C 1107.

For prestressed concrete applications, the nonshrink grout shall have a water soluble chloride ion content of less than 0.06 percent by weight of cementitious material when tested according to ASTM C 1218 or AASHTO T 260; and for non-prestressed concrete applications, the water soluble chloride ion content shall be less than 0.15 percent by weight of cementitious material. The testing according to ASTM 1107, and either ASTM C 1218 or AASHTO T 260 shall be performed by an independent lab a minimum of once every five years, and the test results shall be provided to the Department. The Department will maintain a qualified product list. Mixing of the nonshrink grout shall be according to the manufacturer's specifications."

Revise Article 1029.02 of the Standard Specifications to read:

"**1029.02 Materials.** Materials shall be according to the following.

Item	Article/Section
(a) Cement	1001
(b) Fly Ash	1010
(c) Ground Granulated Blast Furnace (GGBF) Slag	1010
(d) Water	1002
(e) Fine Aggregate	1003
(f) Concrete Admixtures	1021

(g) Foaming Agent (Note 1)

Note 1. The manufacturer shall submit infrared spectrophotometer trace and test results indicating the foaming agent meets the requirements of ASTM C 869 in order to be on the Department's qualified product list. Submitted data/results shall not be more than five years old."

Revise the second paragraph of Article 1103.03(a)(4) the Standard Specifications to read:

"The dispenser system shall provide a visual indication that the liquid admixture is actually entering the batch, such as via a transparent or translucent section of tubing or by independent check with an integrated secondary metering device. If approved by the Engineer, an alternate indicator may be used for admixtures dosed at rates of 25 oz/cwt (1630 mL/100 kg) or greater, such as accelerating admixtures, corrosion inhibitors, and viscosity modifying admixtures."

Revise Article 1103.04 of the Standard Specifications to read:

"**1103.04 Mobile Portland Cement Concrete Plants.** The mobile concrete plant shall be according to AASHTO M 241 and the Bureau of Materials Policy Memorandum "Approval of Volumetric Mobile Mixers for Concrete". The mixer shall be capable of carrying sufficient unmixed materials to produce not less than 6 cu yd (4.6 cu m) of concrete."

Revise the first two sections of Check Sheet #11 "Subsealing of Concrete Pavements" of the Recurring Special Provisions to read:

"Description. This work shall consist of filling voids beneath rigid and composite pavements with cement grout.

Materials. Materials shall be according to the following Articles/Sections of the Standard Specifications:

Item	Article/Section
(a) Cement	1001
(b) Water	1002
(c) Fly Ash	1010
(d) Ground Granulated Blast Furnace (GGBF) Slag	1010
(e) Admixtures	1021
(f) Packaged Rapid Hardening Mortar or Concrete	1018"

Revise the Materials section of Check Sheet #28 "Portland Cement Concrete Inlay or Overlay" of the Recurring Special Provisions to read:

"Materials. Materials shall be according to the following Articles/Sections of the Standard Specifications.

Item	Article/Section
(a) Portland Cement Concrete (Note 1)	1020
(b) Fibers for Concrete	1014
(c) Protective Coat	1023.01

Note 1. Class PV concrete shall be used, except the cement factor for central mixed concrete shall be 6.05 cwt/cu yd (360 kg/cu m). A cement factor reduction according to Article 1020.05(b)(8) of the Standard Specifications will be permitted. CA 5 shall not be used and CA 7 may only be used for overlays that are a minimum of 4.5 in. (113 mm) thick. The Class PV concrete shall have a minimum flexural strength of 550 psi (3800 kPa) or a minimum compressive strength of 3000 psi (20,700 kPa) at 14 days."

80460

COMPENSABLE DELAY COSTS (BDE)

Effective: June 2, 2017
Revised: April 1, 2019

Revise Article 107.40(b) of the Standard Specifications to read:

"(b) Compensation. Compensation will not be allowed for delays, inconveniences, or damages sustained by the Contractor from conflicts with facilities not meeting the above definition; or if a conflict with a utility in an unanticipated location does not cause a shutdown of the work or a documentable reduction in the rate of progress exceeding the limits set herein. The provisions of Article 104.03 notwithstanding, compensation for delays caused by a utility in an unanticipated location will be paid according to the provisions of this Article governing minor and major delays or reduced rate of production which are defined as follows.

(1) Minor Delay. A minor delay occurs when the work in conflict with the utility in an unanticipated location is completely stopped for more than two hours, but not to exceed two weeks.

(2) Major Delay. A major delay occurs when the work in conflict with the utility in an unanticipated location is completely stopped for more than two weeks.

(3) Reduced Rate of Production Delay. A reduced rate of production delay occurs when the rate of production on the work in conflict with the utility in an unanticipated location decreases by more than 25 percent and lasts longer than seven calendar days."

Revise Article 107.40(c) of the Standard Specifications to read:

"(c) Payment. Payment for Minor, Major, and Reduced Rate of Production Delays will be made as follows.

(1) Minor Delay. Labor idled which cannot be used on other work will be paid for according to Article 109.04(b)(1) and (2) for the time between start of the delay and the minimum remaining hours in the work shift required by the prevailing practice in the area.

Equipment idled which cannot be used on other work, and which is authorized to standby on the project site by the Engineer, will be paid for according to Article 109.04(b)(4).

(2) Major Delay. Labor will be the same as for a minor delay.

Equipment will be the same as for a minor delay, except Contractor-owned equipment will be limited to two weeks plus the cost of move-out to either the

Contractor's yard or another job and the cost to re-mobilize, whichever is less. Rental equipment may be paid for longer than two weeks provided the Contractor presents adequate support to the Department (including lease agreement) to show retaining equipment on the job is the most economical course to follow and in the public interest.

(3) Reduced Rate of Production Delay. The Contractor will be compensated for the reduced productivity for labor and equipment time in excess of the 25 percent threshold for that portion of the delay in excess of seven calendar days. Determination of compensation will be in accordance with Article 104.02, except labor and material additives will not be permitted.

Payment for escalated material costs, escalated labor costs, extended project overhead, and extended traffic control will be determined according to Article 109.13."

Revise Article 108.04(b) of the Standard Specifications to read:

"(b) No working day will be charged under the following conditions.

(1) When adverse weather prevents work on the controlling item.

(2) When job conditions due to recent weather prevent work on the controlling item.

(3) When conduct or lack of conduct by the Department or its consultants, representatives, officers, agents, or employees; delay by the Department in making the site available; or delay in furnishing any items required to be furnished to the Contractor by the Department prevents work on the controlling item.

(4) When delays caused by utility or railroad adjustments prevent work on the controlling item.

(5) When strikes, lock-outs, extraordinary delays in transportation, or inability to procure critical materials prevent work on the controlling item, as long as these delays are not due to any fault of the Contractor.

(6) When any condition over which the Contractor has no control prevents work on the controlling item."

Revise Article 109.09(f) of the Standard Specifications to read:

"(f) Basis of Payment. After resolution of a claim in favor of the Contractor, any adjustment in time required for the work will be made according to Section 108. Any adjustment in the costs to be paid will be made for direct labor, direct materials, direct equipment, direct jobsite overhead, direct offsite overhead, and other direct costs allowed by the resolution. Adjustments in costs will not be made for interest charges, loss of anticipated profit, undocumented loss of efficiency, home office overhead and unabsorbed overhead

other than as allowed by Article 109.13, lost opportunity, preparation of claim expenses and other consequential indirect costs regardless of method of calculation.

The above Basis of Payment is an essential element of the contract and the claim cost recovery of the Contractor shall be so limited."

Add the following to Section 109 of the Standard Specifications.

"**109.13 Payment for Contract Delay.** Compensation for escalated material costs, escalated labor costs, extended project overhead, and extended traffic control will be allowed when such costs result from a delay meeting the criteria in the following table.

Contract Type	Cause of Delay	Length of Delay
Working Days	Article 108.04(b)(3) or Article 108.04(b)(4)	No working days have been charged for two consecutive weeks.
Completion Date	Article 108.08(b)(1) or Article 108.08(b)(7)	The Contractor has been granted a minimum two week extension of contract time, according to Article 108.08.

Payment for each of the various costs will be according to the following.

(a) Escalated Material and/or Labor Costs. When the delay causes work, which would have otherwise been completed, to be done after material and/or labor costs have increased, such increases will be paid. Payment for escalated material costs will be limited to the increased costs substantiated by documentation furnished by the Contractor. Payment for escalated labor costs will be limited to those items in Article 109.04(b)(1) and (2), except the 35 percent and 10 percent additives will not be permitted.

(b) Extended Project Overhead. For the duration of the delay, payment for extended project overhead will be paid as follows.

(1) Direct Jobsite and Offsite Overhead. Payment for documented direct jobsite overhead and documented direct offsite overhead, including onsite supervisory and administrative personnel, will be allowed according to the following table.

Original Contract Amount	Supervisory and Administrative Personnel
Up to $5,000,000	One Project Superintendent
Over $ 5,000,000 - up to $25,000,000	One Project Manager, One Project Superintendent or Engineer, and One Clerk
Over $25,000,000 - up to $50,000,000	One Project Manager, One Project Superintendent, One Engineer, and

	One Clerk
Over $50,000,000	One Project Manager, Two Project Superintendents, One Engineer, and One Clerk

(2) Home Office and Unabsorbed Overhead. Payment for home office and unabsorbed overhead will be calculated as 8 percent of the total delay cost.

(c) Extended Traffic Control. Traffic control required for an extended period of time due to the delay will be paid for according to Article 109.04.

When an extended traffic control adjustment is paid under this provision, an adjusted unit price as provided for in Article 701.20(a) for increase or decrease in the value of work by more than ten percent will not be paid.

Upon payment for a contract delay under this provision, the Contractor shall assign subrogation rights to the Department for the Department's efforts of recovery from any other party for monies paid by the Department as a result of any claim under this provision. The Contractor shall fully cooperate with the Department in its efforts to recover from another party any money paid to the Contractor for delay damages under this provision."

80384

CONSTRUCTION AIR QUALITY – DIESEL RETROFIT (BDE)

Effective: June 1, 2010
Revised: January 1, 2025

The reduction of emissions of particulate matter (PM) for off-road equipment shall be accomplished by installing retrofit emission control devices. The term "equipment" refers to diesel fuel powered devices rated at 50 hp and above, to be used on the jobsite in excess of seven calendar days over the course of the construction period on the jobsite (including rental equipment).

Contractor and subcontractor diesel powered off-road equipment assigned to the contract shall be retrofitted according to the table below.

Horsepower Range	Model Year and Older
50-99	2003
100-299	2002
300-599	2000
600-749	2001
750 and up	2005

The retrofit emission control devices shall achieve a minimum PM emission reduction of 50 percent and shall be:

a) Included on the U.S. Environmental Protection Agency (USEPA) *Verified Retrofit Technology List* (https://www.epa.gov/verified-diesel-tech/verified-technologies-list-clean-diesel), or verified by the California Air Resources Board (CARB) (http://www.arb.ca.gov/diesel/verdev/vt/cvt.htm); or

b) Retrofitted with a non-verified diesel retrofit emission control device if verified retrofit emission control devices are not available for equipment proposed to be used on the project, and if the Contractor has obtained a performance certification from the retrofit device manufacturer that the emission control device provides a minimum PM emission reduction of 50 percent.

Note: Large cranes (Crawler mounted cranes) which are responsible for critical lift operations are exempt from installing retrofit emission control devices if such devices adversely affect equipment operation.

Diesel powered off-road equipment with engine ratings of 50 hp and above, which are unable to be retrofitted with verified emission control devices or if performance certifications are not available which will achieve a minimum 50 percent PM reduction, may be granted a waiver by the Department if documentation is provided showing good faith efforts were made by the Contractor to retrofit the equipment.

Construction shall not proceed until the Contractor submits a certified list of the diesel powered off-road equipment that will be used, and as necessary, retrofitted with emission control devices. The list(s) shall include (1) the equipment number, type, make, Contractor/rental company name; and (2) the emission control devices make, model, USEPA or CARB verification number, or performance certification from the retrofit device manufacturer. Equipment reported as fitted with emissions control devices shall be made available to the Engineer for visual inspection of the device installation, prior to being used on the jobsite.

The Contractor shall submit an updated list of retrofitted off-road construction equipment as retrofitted equipment changes or comes on to the jobsite. The addition or deletion of any diesel powered equipment shall be included on the updated list.

If any diesel powered off-road equipment is found to be in non-compliance with any portion of this special provision, the Engineer will issue the Contractor a diesel retrofit deficiency deduction.

Any costs associated with retrofitting any diesel powered off-road equipment with emission control devices shall be considered as included in the contract unit prices bid for the various items of work involved and no additional compensation will be allowed. The Contractor's compliance with this notice and any associated regulations shall not be grounds for a claim.

Diesel Retrofit Deficiency Deduction

When the Engineer determines that a diesel retrofit deficiency exists, a daily monetary deduction will be imposed for each calendar day or fraction thereof the deficiency continues to exist. The calendar day(s) will begin when the time period for correction is exceeded and end with the Engineer's written acceptance of the correction. The daily monetary deduction will be $1,000.00 for each deficiency identified.

The deficiency will be based on lack of diesel retrofit emissions control.

If a Contractor accumulates three diesel retrofit deficiency deductions for the same piece of equipment in a contract period, the Contractor will be shutdown until the deficiency is corrected. Such a shutdown will not be grounds for any extension of the contract time, waiver of penalties, or be grounds for any claim.

REMOVAL AND DISPOSAL OF REGULATED SUBSTANCES (BDE)

Effective: January 1, 2024
Revised: April 1, 2026

Revise the first paragraph of Article 669.04 of the Standard Specifications to read:

"**669.04 Regulated Substances Monitoring.** Regulated substances monitoring includes environmental observation and field screening during regulated substances management activities. The excavated soil and groundwater within the work areas shall be managed as either uncontaminated soil, hazardous waste, special waste, or non-special waste.

As part of the regulated substances monitoring, the monitoring personnel shall perform and document the applicable duties listed on form BDE 2732 "Regulated Substances Monitoring Daily Record (RSMDR)"."

Revise the first two sentences of the nineteenth paragraph of Article 669.05 of the Standard Specifications to read:

"The Contractor shall coordinate waste disposal approvals with the disposal facility and provide the specific analytical testing requirements of that facility. The Contractor shall make all arrangements for collection, transportation, and analysis of landfill acceptance testing."

Revise the last paragraph of Article 669.05 of the Standard Specifications to read:

"The Contractor shall select a permitted landfill facility or CCDD/USFO facility meeting the requirements of 35 Ill. Admin. Code Parts 810-814 or Part 1100, respectively. The Department will review and approve or reject the facility proposed by the Contractor based upon information provided in BDE 2730. The Contractor shall verify whether the selected facility is compliant with those applicable standards as mandated by their permit and whether the facility is presently, has previously been, or has never been, on the United States Environmental Protection Agency (U.S. EPA) National Priorities List or the Resource Conservation and Recovery Act (RCRA) List of Violating Facilities. The use of a Contractor selected facility shall in no manner delay the construction schedule or alter the Contractor's responsibilities as set forth."

Revise the first paragraph of Article 669.07 of the Standard Specifications to read:

"**669.07 Temporary Staging.** Soil classified according to Articles 669.05(a)(2), (b)(1), or (c) may be temporarily staged at the Contractor's option. All other soil classified according to Articles 669.05(a)(1), (a)(3), (a)(4), (a)(5), (a)(6), or (b)(2) shall be managed and disposed of without temporary staging to the greatest extent practicable. If circumstances beyond the Contractor's control require temporary staging of these latter materials, the Contractor shall request approval from the Engineer in writing.

Topsoil for re-use as final cover which has been field screened and found not to exhibit PID readings over daily background readings as documented on the BDE 2732, visual staining or

odors, and is classified according to Articles 669.05(a)(2), (a)(3), (a)(4), (b)(1), or (c) may be temporarily staged at the Contractor's option."

Add the following paragraph after the fourth paragraph of Article 669.10 of the Standard Specifications.

"Regulated substances monitoring will be measured for payment per calendar day, where 4 or more hours of monitoring activities is defined as 1.0 calendar day and less than 4 hours of monitoring activities is defined as 0.5 calendar day."

Revise the second paragraph of Article 669.11 of the Standard Specification to read:

"Regulated substances monitoring, including completion of form BDE 2732 for each day of work, will be paid for at the contract unit price per calendar day for REGULATED SUBSTANCES MONITORING. In no case will more than 1.0 calendar day be paid on a given calendar day."

Add the following paragraph after the sixth paragraph of Article 669.11 of the Standard Specifications.

"The sampling and testing of effluent water derived from dewatering discharges for priority pollutants volatile organic compounds (VOCs), priority pollutants semi-volatile organic compounds (SVOCs), or priority pollutants metals, will be paid for at the contract unit price per each for VOCS GROUNDWATER ANALYSIS using EPA Method 8260B, SVOCS GROUNDWATER ANALYSIS using EPA Method 8270C, or RCRA METALS GROUNDWATER ANALYSIS using EPA Methods 6010B and 7471A. This price shall include transporting the sample from the job site to the laboratory."

Revise the first sentence of the eight paragraph of Article 669.11 of the Standard Specifications to read:

"Payment for temporary staging of soil classified according to Articles 669.05(a)(1), (a)(3), (a)(4), (a)(5), (a)(6), or (b)(2) to be managed and disposed of, if required and approved by the Engineer, will be paid according to Article 109.04."

VEHICLE AND EQUIPMENT WARNING LIGHTS (BDE)

Effective: November 1, 2021
Revised: November 1, 2022

Add the following paragraph after the first paragraph of Article 701.08 of the Standard Specifications:

"The Contractor shall equip all vehicles and equipment with high-intensity oscillating, rotating, or flashing, amber or amber-and-white, warning lights which are visible from all directions. In accordance with 625 ILCS 5/12-215, the lights may only be in operation while the vehicle or equipment is engaged in construction operations."

80439

WORK ZONE TRAFFIC CONTROL DEVICES (BDE)

Effective: March 2, 2020
Revised: January 1, 2026

Add the following to Article 701.03 of the Standard Specifications:

"(q) Temporary Sign Supports ..... 1106.02"

Revise Article 701.03(p) of the Standard Specifications to read:

"(p) Detectable Pedestrian Channelizing Barricades ..... 1106.02(m)"

Revise the third paragraph of Article 701.14 of the Standard Specifications to read:

"For temporary sign supports, the Contractor shall provide a FHWA eligibility letter for each device used on the contract. The letter shall provide information for the set-up and use of the device as well as a detailed drawing of the device. The signs shall be supported within 20 degrees of vertical. Weights used to stabilize signs shall be attached to the sign support per the manufacturer's specifications."

Revise the first paragraph of Article 701.15 of the Standard Specifications to read:

"**701.15 Traffic Control Devices.** For devices that must meet crashworthiness standards, the Contractor shall provide a manufacturer's self-certification or a FHWA eligibility letter for each Category 1 device and a FHWA eligibility letter for each Category 2 and Category 3 device used on the contract. The self-certification or letter shall provide information for the set-up and use of the device as well as a detailed drawing of the device."

Revise the first six paragraphs of Article 1106.02 of the Standard Specifications to read:

"**1106.02 Devices.** Work zone traffic control devices and combinations of devices shall meet crashworthiness standards for their respective categories. The categories are as follows.

Category 1 includes small, lightweight, channelizing and delineating devices that have been in common use for many years and are known to be crashworthy by crash testing of similar devices or years of demonstrable safe performance. These include cones, tubular markers, plastic drums, and delineators, with no attachments (e.g. lights). Category 1 devices shall be MASH compliant.

Category 2 includes devices that are not expected to produce significant vehicular velocity change but may otherwise be hazardous. These include vertical panels with lights, barricades, temporary sign supports, and Category 1 devices with attachments (e.g. drums with lights). Category 2 devices shall be MASH compliant.

Category 3 includes devices that are expected to cause significant velocity changes or other potentially harmful reactions to impacting vehicles. These include crash cushions (impact attenuators), truck mounted attenuators, and other devices not meeting the definitions of Category 1 or 2. Category 3 devices manufactured after December 31, 2019 shall be MASH compliant. Category 3 devices manufactured on or before December 31, 2019, and compliant with NCHRP 350, may be used on contracts let before December 31, 2029. Category 3 devices shall be crash tested for Test Level 3 or the test level specified.

Category 4 includes portable or trailer-mounted devices such as sign supports, speed feedback displays, arrow boards, changeable message signs, temporary traffic signals, and area lighting supports. It is preferable for Category 4 devices manufactured after December 31, 2019 to be MASH-16 compliant; however, there are currently no crash tested devices in this category, so it remains exempt from the NCHRP 350 or MASH compliance requirement.

For each type of device, when no more than one MASH compliant is available, an NCHRP 350 compliant device may be used, even if manufactured after December 31, 2019."

Revise the first paragraph of Section 1106.02(a) of the Standard Specifications to read:

"(a) Lights. Lights shall meet the requirements of Chapter 13 of the "Equipment and Materials Standards of the Institute of Transportation Engineers," 1998, Institute of Transportation Engineers, and shall be visible on a clear night from a distance of 3000 ft (900 m). Lights are classified as follows."

Revise Articles 1106.02(g), 1106.02(k), 1106.02(l), and 1106.02(m) of the Standard Specifications to read:

"(g) Truck Mounted/Trailer Mounted Attenuators. The attenuator shall be approved for use at Test Level 3. Test Level 2 may be used for normal posted speeds less than or equal to 45 mph.

(k) Temporary Water Filled Barrier. The water filled barrier shall be a lightweight plastic shell designed to accept water ballast and be on the Department's qualified product list.

Shop drawings shall be furnished by the manufacturer and shall indicate the deflection of the barrier as determined by acceptance testing; the configuration of the barrier in that test; and the vehicle weight, velocity, and angle of impact of the deflection test. The Engineer shall be provided one copy of the shop drawings.

(l) Movable Traffic Barrier. The movable traffic barrier shall be on the Department's qualified product list.

Shop drawings shall be furnished by the manufacturer and shall indicate the deflection of the barrier as determined by acceptance testing; the configuration of the barrier in that test; and the vehicle weight, velocity, and angle of impact of the deflection test. The

Engineer shall be provided one copy of the shop drawings. The barrier shall be capable of being moved on and off the roadway on a daily basis.

(m) Detectable Pedestrian Channelizing Barricades. The top panel or handrail shall be continuous and there should be at least a 2 in. (50 mm) gap between the hand trailing edge and its support. When visible to vehicular traffic, the top rail shall have alternating white and orange retroreflective stripes sloping at 45 degrees. The bottom panel shall be continuous and have alternating white and orange retroreflective stripes sloping at 45 degrees. Barricade stripes shall be 6 in. (150 mm) in width. The predominant color for other barricade components shall be white, orange, or silver."

80427

State of Illinois
DEPARTMENT OF TRANSPORTATION
Bureau of Local Roads and Streets

SPECIAL PROVISION FOR FUEL COST ADJUSTMENT FOR LOCAL LETTINGS

(RETURN FORM WITH BID)

Effective: June 16, 2017
Revised:

Description. Fuel cost adjustments will be made to provide additional compensation to the Contractor, or a credit to the project owner, for fluctuations in fuel prices when optioned by the Contractor. The bidder shall indicate on the attached form whether or not this special provision will be part of the contract and submit the completed form with his/her bid. Failure to submit the form or failure to indicate contract number, company name and sign and date the form shall make this contract exempt of fuel cost adjustments for all categories of work. Failure to indicate "Yes" for any category of work will make that category of work exempt from fuel cost adjustment.

General. The fuel cost adjustment shall apply to contract pay items as grouped by category. The adjustment shall only apply to those categories of work checked "Yes", and only when the cumulative plan quantities for a category exceed the required threshold. Adjustments to work items in a category, either up or down, and extra work paid for by agreed unit price will be subject to fuel cost adjustment only when the category representing the added work was subject to the fuel cost adjustment. Extra work paid for at a lump sum price or by force account will not be subject to fuel cost adjustment. Category descriptions and thresholds for application and the fuel usage factors which are applicable to each are as follows:

(a) Categories of Work.

(1) Category A: Earthwork. Contract pay items performed under Sections 202, 204, and 206 of the IDOT Standard Specifications for Road and Bridge Construction including any modified standard or nonstandard items where the character of the work to be performed is considered earthwork. The cumulative total of all applicable item plan quantities shall exceed 25,000 cu yd (20,000 cu m). Included in the fuel usage factor is a weighted average 0.10 gal/cu yd (0.50 liters/cu m) factor for trucking.

(2) Category B: Subbases and Aggregate Base Courses. Contract pay items constructed under Sections 311, 312 and 351 of the IDOT Standard Specifications for Road and Bridge Construction including any modified standard or nonstandard items where the character of the work to be performed is considered construction of a subbase or aggregate, stabilized or modified base course. The cumulative total of all applicable item plan quantities shall exceed 5000 tons (4500 metric tons). Included in the fuel usage factor is a 0.60 gal/ton (2.50 liters/metric ton) factor for trucking.

(3) Category C: Hot-Mix Asphalt (HMA) Bases, Pavements and Shoulders. Contract pay items constructed under Sections 355, 406, 407 and 482 of the IDOT Standard Specifications for Road and Bridge Construction including any modified standard or nonstandard items where the character of the work to be performed is considered HMA bases, pavements and shoulders. The cumulative total of all applicable item plan quantities shall exceed 5000 tons (4500 metric tons). Included in the fuel usage factor is 0.60 gal/ton (2.50 liters/metric ton) factor for trucking.

(4) Category D: Portland Cement Concrete (PCC) Bases, Pavements and Shoulders. Contract pay items constructed under Sections 353, 420, 421 and 483 of the IDOT Standard Specifications for Road and Bridge Construction including any modified standard or nonstandard items where the character of the work to be performed is considered PCC base, pavement or shoulder. The cumulative total of all applicable item plan quantities shall exceed 7500 sq yd (6000 sq m). Included in the fuel usage factor is 1.20 gal/cu yd (5.94 liters/cu m) factor for trucking.

(5) Category E: Structures. Structure items having a cumulative bid price that exceeds $250,000 for pay items constructed under Sections 502, 503, 504, 505, 512, 516 and 540 of the IDOT Standard Specifications for Road and Bridge Construction including any modified standard or nonstandard items where the character of the work to be performed is considered structure work when similar to that performed under these sections and not included in categories A through D.

(b) Fuel Usage Factors.

English Units

Category	Factor	Units
A - Earthwork	0.34	gal / cu yd
B – Subbase and Aggregate Base courses	0.62	gal / ton
C – HMA Bases, Pavements and Shoulders	1.05	gal / ton
D – PCC Bases, Pavements and Shoulders	2.53	gal / cu yd
E – Structures	8.00	gal / $1000

Metric Units

Category	Factor	Units
A - Earthwork	1.68	liters / cu m
B – Subbase and Aggregate Base courses	2.58	liters / metric ton
C – HMA Bases, Pavements and Shoulders	4.37	liters / metric ton
D – PCC Bases, Pavements and Shoulders	12.52	liters / cu m
E – Structures	30.28	liters / $1000

(c) Quantity Conversion Factors.

Category	Conversion	Factor
B	sq yd to ton	0.057 ton / sq yd / in depth
	sq m to metric ton	0.00243 metric ton / sq m / mm depth
C	sq yd to ton	0.056 ton / sq yd / in depth
	sq m to metric ton	0.00239 m ton / sq m / mm depth
D	sq yd to cu yd	0.028 cu yd / sq yd / in depth
	sq m to cu m	0.001 cu m / sq m / mm depth

Method of Adjustment. Fuel cost adjustments will be computed as follows.

$CA = (FPI_P - FPI_L) \times FUF \times Q$

Where: CA = Cost Adjustment, $
FPI_P = Fuel Price Index, as published by the Department of Transportation for the month the work is performed, $/gal ($/liter)
FPI_L = Fuel Price Index, as published by the Department of Transportation for the month prior to the letting for work paid for at the contract price; or for the month the agreed unit price letter is submitted by the Contractor for extra work paid for by agreed unit price, $/gal ($/liter)
FUF = Fuel Usage Factor in the pay item(s) being adjusted
Q = Authorized construction Quantity, tons (metric tons) or cu yd (cu m)

The entire FUF indicated in paragraph (b) will be used regardless of use of trucking to perform the work.

Basis of Payment. Fuel cost adjustments may be positive or negative but will only be made when there is a difference between the FPI_L and FPI_P in excess of five percent, as calculated by:

Percent Difference $= \{(FPI_L - FPI_P) \div FPI_L\} \times 100$

Fuel cost adjustments will be calculated for each calendar month in which applicable work is performed; and will be paid or deducted when all other contract requirements for the items of work are satisfied. The adjustments shall not apply during contract time subject to liquidated damages for completion of the entire contract.

Return With Bid

OPTION FOR
FUEL COST ADJUSTMENT

The bidder shall submit this completed form with his/her bid. Failure to submit the form or properly complete contract number, company name, and sign and date the form shall make this contract exempt of fuel cost adjustments in all categories. Failure to indicate "Yes" for any category of work at the time of bid will make that category of work exempt from fuel cost adjustment. After award, this form, when submitted shall become part of the contract.

Contract No.: _____

Company Name: _____

Contractor's Option:

Is your company opting to include this special provision as part of the contract plans for the following categories of work?

Category A Earthwork.	Yes	☐
Category B Subbases and Aggregate Base Courses	Yes	☐
Category C HMA Bases, Pavements and Shoulders	Yes	☐
Category D PCC Bases, Pavements and Shoulders	Yes	☐
Category E Structures	Yes	☐

Signature: _____ **Date:** _____

State of Illinois
DEPARTMENT OF TRANSPORTATION
Bureau of Local Roads and Streets

SPECIAL PROVISION FOR STEEL COST ADJUSTMENT FOR LOCAL LETTINGS

(RETURN FORM WITH BID)

Effective: June 16, 2017
Revised:

Description. Steel cost adjustments will be made to provide additional compensation to the Contractor, or a credit to the project owner, for fluctuations in steel prices when optioned by the Contractor. The bidder shall indicate on the attached form whether or not this special provision will be part of the contract and submit the completed form with his/her bid. Failure to submit the form or failure to indicate contract number, company name, and sign and date the form shall make this contract exempt of steel cost adjustments for all items of steel. Failure to indicate "Yes" for any item of work will make that item of steel exempt from steel cost adjustment.

Types of Steel Products. An adjustment will be made for fluctuations in the cost of steel used in the manufacture of the following items:

Metal Piling (excluding temporary sheet piling)
Structural Steel
Reinforcing Steel

Other steel materials such as dowel bars, tie bars, mesh reinforcement, guardrail, steel traffic signal and light poles, towers and mast arms, metal railings (excluding wire fence), and frames and grates will be subject to a steel cost adjustment when the pay items they are used in have a contract value of $10,000 or greater.

The adjustments shall apply to the above items when they are part of the original proposed construction, or added as extra work and paid for by agreed unit prices. The adjustments shall not apply when the item is added as extra work and paid for at a lump sum price or by force account.

Documentation. Sufficient documentation shall be furnished to the Engineer to verify the following:

(a) The dates and quantity of steel, in lb (kg), shipped from the mill to the fabricator.

(b) The quantity of steel, in lb (kg), incorporated into the various items of work covered by this special provision. The project owner reserves the right to verify submitted quantities.

Method of Adjustment. Steel cost adjustments will be computed as follows:

$SCA = Q \times D$

Where: SCA = steel cost adjustment, in dollars
Q = quantity of steel incorporated into the work, in lb (kg)
D = price factor, in dollars per lb (kg)

$D = MPI_M - MPI_L$

Where: MPI_M = The Materials Cost Index for steel as published by the Engineering News-Record for the month the steel is shipped from the mill. The indices will be converted from dollars per 100 lb to dollars per lb (kg).

MPI_L = The Materials Cost Index for steel as published by the Engineering News-Record for the month prior to the letting for work paid for at the contract price; or for the month the agreed unit price letter is submitted by the Contractor for extra work paid for by agreed unit price. The indices will be converted from dollars per 100 lb to dollars per lb (kg).

The unit weights (masses) of steel that will be used to calculate the steel cost adjustment for the various items are shown in the attached table.

No steel cost adjustment will be made for any products manufactured from steel having a mill shipping date prior to the letting date.

If the Contractor fails to provide the required documentation, the method of adjustment will be calculated as described above; however, the MPI_M will be based on the date the steel arrives at the job site. In this case, an adjustment will only be made when there is a decrease in steel costs.

Basis of Payment. Steel cost adjustments may be positive or negative but will only be made when there is a difference between the MPI_L and MPI_M in excess of five percent, as calculated by:

$$\text{Percent Difference} = \{(MPI_L - MPI_M) \div MPI_L\} \times 100$$

Steel cost adjustments will be calculated by the Engineer and will be paid or deducted when all other contract requirements for the items of work are satisfied. Adjustments will only be made for fluctuations in the cost of the steel as described herein. No adjustment will be made for changes in the cost of manufacturing, fabrication, shipping, storage, etc.

The adjustments shall not apply during contract time subject to liquidated damages for completion of the entire contract.

Attachment

Item	Unit Mass (Weight)
Metal Piling (excluding temporary sheet piling)	
Furnishing Metal Pile Shells 12 in. (305 mm), 0.179 in. (3.80 mm) wall thickness)	23 lb/ft (34 kg/m)
Furnishing Metal Pile Shells 12 in. (305 mm), 0.250 in. (6.35 mm) wall thickness)	32 lb/ft (48 kg/m)
Furnishing Metal Pile Shells 14 in. (356 mm), 0.250 in. (6.35 mm) wall thickness)	37 lb/ft (55 kg/m)
Other piling	See plans
Structural Steel	See plans for weights (masses)
Reinforcing Steel	See plans for weights (masses)
Dowel Bars and Tie Bars	6 lb (3 kg) each
Mesh Reinforcement	63 lb/100 sq ft (310 kg/sq m)
Guardrail	
Steel Plate Beam Guardrail, Type A w/steel posts	20 lb/ft (30 kg/m)
Steel Plate Beam Guardrail, Type B w/steel posts	30 lb/ft (45 kg/m)
Steel Plate Beam Guardrail, Types A and B w/wood posts	8 lb/ft (12 kg/m)
Steel Plate Beam Guardrail, Type 2	305 lb (140 kg) each
Steel Plate Beam Guardrail, Type 6	1260 lb (570 kg) each
Traffic Barrier Terminal, Type 1 Special (Tangent)	730 lb (330 kg) each
Traffic Barrier Terminal, Type 1 Special (Flared)	410 lb (185 kg) each
Steel Traffic Signal and Light Poles, Towers and Mast Arms	
Traffic Signal Post	11 lb/ft (16 kg/m)
Light Pole, Tenon Mount and Twin Mount, 30 - 40 ft (9 – 12 m)	14 lb/ft (21 kg/m)
Light Pole, Tenon Mount and Twin Mount, 45 - 55 ft (13.5 – 16.5 m)	21 lb/ft (31 kg/m)
Light Pole w/Mast Arm, 30 - 50 ft (9 – 15.2 m)	13 lb/ft (19 kg/m)
Light Pole w/Mast Arm, 55 - 60 ft (16.5 – 18 m)	19 lb/ft (28 kg/m)
Light Tower w/Luminaire Mount, 80 - 110 ft (24 – 33.5 m)	31 lb/ft (46 kg/m)
Light Tower w/Luminaire Mount, 120 - 140 ft (36.5 – 42.5 m)	65 lb/ft (97 kg/m)
Light Tower w/Luminaire Mount, 150 - 160 ft (45.5 – 48.5 m)	80 lb/ft (119 kg/m)
Metal Railings (excluding wire fence)	
Steel Railing, Type SM	64 lb/ft (95 kg/m)
Steel Railing, Type S-1	39 lb/ft (58 kg/m)
Steel Railing, Type T-1	53 lb/ft (79 kg/m)
Steel Bridge Rail	52 lb/ft (77 kg/m)
Frames and Grates	
Frame	250 lb (115 kg)
Lids and Grates	150 lb (70 kg)

Return With Bid

OPTION FOR
STEEL COST ADJUSTMENT

The bidder shall submit this completed form with his/her bid. Failure to submit the form or properly complete contract number, company name, and sign and date the form shall make this contract exempt of steel cost adjustments for all items of steel. Failure to indicate "Yes" for any item of work will make that item of steel exempt from steel cost adjustment. After award, this form, when submitted shall become part of the contract.

Contract No.: _____

Company Name: _____

Contractor's Option:

Is your company opting to include this special provision as part of the contract plans for the following items of work?

Metal Piling	Yes	☐
Structural Steel	Yes	☐
Reinforcing Steel	Yes	☐
Dowel Bars, Tie Bars and Mesh Reinforcement	Yes	☐
Guardrail	Yes	☐
Steel Traffic Signal and Light Poles, Towers and Mast Arms	Yes	☐
Metal Railings (excluding wire fence)	Yes	☐
Frames and Grates	Yes	☐

Signature: _____ **Date:** _____

State of Illinois
Department of Transportation
Bureau of Local Roads and Streets

SPECIAL PROVISION FOR CONSTRUCTION AND MAINTENANCE SIGNS

Effective: January 1, 2004
Revised: June 1, 2007

All references to Sections or Articles in this specification shall be construed to mean a specific Section or Article of the Standard Specifications for Road and Bridge Construction, adopted by the Department of Transportation.

701.14. Signs. Add the following paragraph to Article 701.14:

All warning signs shall have minimum dimensions of 1200 mm x 1200 mm (48" x 48") and have a black legend on a fluorescent orange reflectorized background, meeting, as a minimum, Type AP reflectivity requirements of Table 1091-2 in Article 1091.02.

ABV	ABOVE
A/C	ACCESS CONTROL
AC	ACRE
ADJ	ADJUST
AS	AERIAL SURVEYS
AGG	AGGREGATE
AH	AHEAD
APT	APARTMENT
ASPH	ASPHALT
AUX	AUXILIARY
AGS	AUXILIARY GAS VALVE (SERVICE)
AVE	AVENUE
AX	AXIS OF ROTATION
BK	BACK
B-B	BACK TO BACK
BKPL	BACKPLATE
B	BARN
BARR	BARRICADE
BL	BASELINE
BGN	BEGIN
BM	BENCHMARK
BIND	BINDER
BIT	BITUMINOUS
BTM	BOTTOM
BLVD	BOULEVARD
BRK	BRICK
BBOX	BUFFALO BOX
BLDG	BUILDING
CATV	CABLE
CIP	CAST IRON PIPE
CB	CATCH BASIN
C-C	CENTER TO CENTER
CL	CENTERLINE OR CLEARANCE
CL-E	CENTERLINE TO EDGE
CL-F	CENTERLINE TO FACE
CTS	CENTERS
CERT	CERTIFIED
CHSLD	CHISELED
CS	CITY STREET
CP	CLAY PIPE
CLSD	CLOSED
CLID	CLOSED LID
CT	COAT OR COURT
COMB	COMBINATION
C	COMMERCIAL BUILDING
CE	COMMERCIAL ENTRANCE
CONC	CONCRETE
CONST	CONSTRUCT
CONTD	CONTINUED
CONT	CONTINUOUS
COR	CORNER
CORR	CORRUGATED
CMP	CORRUGATED METAL PIPE
CNTY	COUNTY
CH	COUNTY HIGHWAY
CSE	COURSE
XSECT	CROSS SECTION
m^3	CUBIC METER
mm^3	CUBIC MILLIMETER
CU YD	CUBIC YARD
CULV	CULVERT
C&G	CURB & GUTTER
D	DEGREE OF CURVE
DC	DEPRESSED CURVE
DET	DETECTOR
DIA	DIAMETER
DIST	DISTRICT
DOM	DOMESTIC
DBL	DOUBLE
DSEL	DOWNSTREAM ELEVATION
DSFL	DOWNSTREAM FLOWLINE
DR	DRAINAGE OR DRIVE
DI	DRAINAGE INLET OR DROP INLET
DRV	DRIVEWAY
DCT	DUCT
EA	EACH
EB	EASTBOUND
EOP	EDGE OF PAVEMENT
E-CL	EDGE TO CENTERLINE
E-E	EDGE TO EDGE
ELEC	ELECRICAL
EL	ELEVATION
ENTR	ENTRANCE
EXC	EXCAVATION
EX	EXISTING
EXPWAY	EXPRESSWAY
E	EXTERNAL DISTANCE OF HORIZONTAL CURVE
E	OFFSET DISTANCE TO VERTICAL CURVE
F-F	FACE TO FACE
FA	FEDERAL AID
FAI	FEDERAL AID INTERSTATE
FAP	FEDERAL AID PRIMARY
FAS	FEDERAL AID SECONDARY
FAUS	FEDERAL AID URBAN SECONDARY
FP	FENCE POST
OPT	FIBER OPTIC
FE	FIELD ENTRANCE
FH	FIRE HYDRANT
FL	FLOW LINE
FB	FOOT BRIDGE
FDN	FOUNDATION
FR	FRAME
F&G	FRAME & GRATE
FRWAY	FREEWAY
GAL	GALLON
GALV	GALVANIZED
G	GARAGE
GM	GAS METER
GV	GAS VALVE
GIS	GEOGRAPHICAL INFORMATION SYSTEM
GRAN	GRANULAR
GR	GRATE
GRVL	GRAVEL
GND	GROUND
GUT	GUTTER
GP	GUY POLE
GW	GUY WIRE
HH	HANDHOLE
HATCH	HATCHING
HD	HEAD
HDW	HEADWALL
HDUTY	HEAVY DUTY
ha	HECTARE
HMA	HOT MIX ASPHALT
HWY	HIGHWAY
HORIZ	HORIZONTAL
HSE	HOUSE
IL	ILLINOIS
IMP	IMPROVEMENT
IN DIA	INCH DIAMETER
INL	INLET
INST	INSTALLATION
IDS	INTERSECTION DESIGN STUDY
INV	INVERT
IP	IRON PIPE
IR	IRON ROD
JT	JOINT
kg	KILOGRAM
km	KILOMETER
LS	LANDSCAPING
LN	LANE
LT	LEFT
LIDAR	LIGHT DETECTION AND RANGING
LP	LIGHT POLE
LGT	LIGHTING
LF	LINEAL FEET OR LINEAR FEET
L	LITER OR CURVE LENGTH
LC	LONG CHORD
LNG	LONGITUDINAL
L SUM	LUMP SUM
MACH	MACHINE
MB	MAIL BOX
MH	MANHOLE
MATL	MATERIAL
MED	MEDIAN
m	METER
METH	METHOD
M	MID-ORDINATE
mm	MILLIMETER
mm DIA	MILLIMETER DIAMETER
MIX	MIXTURE
MBH	MOBILE HOME
MOD	MODIFIED
MFT	MOTOR FUEL TAX
N & BC	NAIL & BOTTLE CAP
N & C	NAIL & CAP
N & W	NAIL & WASHER
NC	NORMAL CROWN
NB	NORTHBOUND
NE	NORTHEAST
NW	NORTHWEST
O/S	OFFSET
O&C	OIL AND CHIP
OLID	OPEN LID
PAT	PATTERN
PVD	PAVED
PVMT	PAVEMENT
PM	PAVEMENT MARKING
PED	PEDESTAL
PNT	POINT
PC	POINT OF CURVATURE
PI	POINT OF INTERSECTION OF HORIZONTAL CURVE
PRC	POINT OF REVERSE CURVE
PT	POINT OF TANGENCY
POT	POINT ON TANGENT
POLYETH	POLYETHYLENE
PCC	PORTLAND CEMENT CONCRETE
PP	POWER POLE OR PRINCIPAL POINT
PRM	PRIME
PE	PRIVATE ENTRANCE
PROF	PROFILE
PGL	PROFILE GRADELINE
PROJ	PROJECT
P.C.	PROPERTY CORNER
PL	PROPERTY LINE
PR	PROPOSED
R	RADIUS or RESIDENTUAL
RR	RAILROAD
RRS	RAILROAD SPIKE
RPS	REFERENCE POINT STAKE
REF	REFLECTIVE
RCCP	REINFORCED CONCRETE CULVERT PIPE
REINF	REINFORCEMENT
REM	REMOVAL
RC	REMOVE CROWN
REP	REPLACEMENT
REST	RESTAURANT
RESURF	RESURFACING
RET	RETAINING
RT	RIGHT
ROW	RIGHT-OF-WAY
RD	ROAD
RDWY	ROADWAY
RTE	ROUTE
SAN	SANITARY
SANS	SANITARY SEWER
SEC	SECTION
SEED	SEEDING
SHAP	SHAPING
S	SHED
SH	SHEET
SHLD	SHOULDER
SW	SIDEWALK OR SOUTHWEST
SIG	SIGNAL
SOD	SODDING
SM	SOLID MEDIAN
SB	SOUTHBOUND
SE	SOUTHEAST
SPL	SPECIAL
SD	SPECIAL DITCH
SQ FT	SQUARE FEET
m^2	SQUARE METER
mm^2	SQUARE MILLIMETER
SQ YD	SQUARE YARD
STB	STABILIZED
STD	STANDARD
SBI	STATE BOND ISSUE
SR	STATE ROUTE
STA	STATION
SPBGR	STEEL PLATE BEAM GUARDRAIL
SS	STORM SEWER
STY	STORY
ST	STREET
STR	STRUCTURE
e	SUPERELEVATION RATE
S.E. RUN.	SUPERELEVATION RUNOFF LENGTH
SURF	SURFACE
SMK	SURVEY MARKER
T	TANGENT DISTANCE
T.R.	TANGENT RUNOUT DISTANCE
TEL	TELEPHONE
TB	TELEPHONE BOX
TP	TELEPHONE POLE
TEMP	TEMPORARY
TBM	TEMPORARY BENCH MARK
TD	TILE DRAIN
TBE	TO BE EXTENDED
TBR	TO BE REMOVED
TBS	TO BE SAVED
TWP	TOWNSHIP
TR	TOWNSHIP ROAD
TS	TRAFFIC SIGNAL
TSCB	TRAFFIC SIGNAL CONTROL BOX
TSC	TRAFFIC SYSTEMS CENTER
TRVS	TRANSVERSE
TRVL	TRAVEL
TRN	TURN
TY	TYPE
T-A	TYPE A
TYP	TYPICAL
UNDGND	UNDERGROUND
USGS	U.S. GEOLOGICAL SURVEY
USEL	UPSTREAM ELEVATION
USFL	UPSTREAM FLOWLINE
UTIL	UTILITY
VBOX	VALVE BOX
VV	VALVE VAULT
VLT	VAULT
VEH	VEHICLE
VP	VENT PIPE
VERT	VERTICAL
VC	VERTICAL CURVE
VPC	VERTICAL POINT OF CURVATURE
VPI	VERTICAL POINT OF INTERSECTION
VPT	VERTICAL POINT OF TANGENCY
WM	WATER METER
WV	WATER VALVE
WMAIN	WATER MAIN
WB	WESTBOUND
WILDFL	WILDFLOWERS
W	WITH
WO	WITHOUT

Illinois Department of Transportation

APPROVED January 1, 2026
ENGINEER OF POLICY AND PROCEDURES

APPROVED January 1, 2026
ENGINEER OF DESIGN AND ENVIRONMENT

ISSUED 1-1-97

DATE	REVISIONS
1-1-26	Updated bike lane symbol, bike
	shared roadway symbol, and
	signing items.
1-1-21	Updated fonts, abbreviations,
	and symbols.

STANDARD SYMBOLS, ABBREVIATIONS, AND PATTERNS

STANDARD 000001-09

ADJUSTMENT ITEMS

	EX	PR
Structure To Be Adjusted		ADJ
Structure To Be Cleaned		C
Main Structure To Be Filled		FM
Structure To Be Filled		F
Structure To Be Filled Special		FSP
Structure To Be Removed		R
Structure To Be Reconstructed		REC
Structure To Be Reconstructed Special		RSP
Frame and Grate To Be Adjusted		A
Frame and Lid To Be Adjusted		A
Domestic Service Box To Be Adjusted		A
Valve Vault To Be Adjusted		A
Special Adjustment		SP
Item To Be Abandoned		AB
Item To Be Moved		M
Item To Be Relocated		REL
Pavement Removal and Replacement		

ALIGNMENT ITEMS

	EX	PR
Baseline		
Centerline		
Centerline Break Circle		
Baseline Symbol		
Centerline Symbol		
PI Indicator		
Point Indicator		
Horizontal Curve Data (Half Size)	EX. CURVE P.I. STA= Δ= D= R= T= L= E= e= T.R.= S.E. RUN= P.C. STA= P.T. STA=	CURVE P.I. STA= Δ= D= R= T= L= E= e= T.R.= S.E. RUN= P.C. STA= P.T. STA=

BOUNDARIES ITEMS

	EX	PR
Dashed Property Line		
Solid Property/Lot Line		
Section/Grant Line		
Quarter Section Line		
Quarter/Quarter Section Line		
County/Township Line		
State Line		
Chiseled Square Found		
Iron Pipe Found		
Iron Pipe Set		
Survey Marker		
Property Line Symbol		
Same Ownership Symbol (Half Size)		
Northwest Quarter Corner (Half Size)		
Section Corner (Half Size)		
Southeast Quarter Corner (Half Size)		

DRAINAGE ITEMS

	EX	PR
Channel or Stream Line		
Culvert Line		
Grading & Shaping Ditches		
Drainage Boundary Line		
Paved Ditch		
Aggregate Ditch		
Pipe Underdrain		
Storm Sewer		
Flowline		
Ditch Check		
Headwall		
Inlet		
Manhole		
Summit		
Roadway Ditch Flow		
Swale		
Catch Basin		
Culvert End Section		
Water Surface Indicator		
Riprap		

HYDRAULICS ITEMS

	EX	PR
Overflow		
Sheet Flow		
Hydrant Outlet		

Illinois Department of Transportation

APPROVED January 1, 2026
ENGINEER OF POLICY AND PROCEDURES

APPROVED January 1, 2026
ENGINEER OF DESIGN AND ENVIRONMENT

ISSUED 1-1-97

STANDARD SYMBOLS, ABBREVIATIONS, AND PATTERNS

STANDARD 000001-09

EROSION & SEDIMENT CONTROL ITEMS

	EX	PR
Cleaning & Grading Limits		
Dike		
Erosion Control Fence		
Perimeter Erosion Barrier		
Temporary Fence		
Ditch Check Temporary		
Ditch Check Permanent		
Inlet & Pipe Protection		
Sediment Basin		
Erosion Control Blanket		
Fabric Formed Concrete Revetment Mat		
Turf Reinforcement Mat		
Mulch Temporary		
Mulch Method 1		
Mulch Method 2 Stabilized		
Mulch Method 3 Hydraulic		

CONTOUR ITEMS

	EX	PR
Approx. Index Line		
Approx. Intermediate Line		
Index Contour		
Intermediate Contour		

Illinois Department of Transportation

APPROVED January 1, 2026
ENGINEER OF POLICY AND PROCEDURES

APPROVED January 1, 2026
ENGINEER OF DESIGN AND ENVIRONMENT

ISSUED 1-1-97

NON-HIGHWAY IMPROVEMENT ITEMS

	EX	PR
Noise Attn./Levee		
Field Line		
Fence		
Base of Levee		
Mailbox		
Multiple Mailboxes		
Pay Telephone		
Advertising Sign		
*ITS Camera		
Wind Turbine		
Cellular Tower		

*Intelligent Transportation Systems

LANDSCAPING ITEMS

	EX	PR
Contour Mounding Line		
Fence		
Fence Post		
Shrubs		
Mowline		
Perennial Plants		
Seeding Class 2		
Seeding Class 2A		
Seeding Class 4		
Seeding Class 4 & 5 Combined		

EXISTING LANDSCAPING ITEMS (contd.)

	EX	PR
Seeding Class 5		
Seeding Class 7		
Seedlings Type 1		
Seedlings Type 2		
Sodding		
Mowstake w/Sign		
Tree Trunk Protection		
Evergreen Tree	E	
Shade Tree	E	

LIGHTING

	EX	PR
Duct		
Conduit		
Electrical Aerial Cable	A A A	A A A
Electrical Buried Cable	L L	L L
Controller		
Underpass Luminaire		
Power Pole		

STANDARD SYMBOLS, ABBREVIATIONS, AND PATTERNS

(Sheet 3 of 9)

STANDARD 000001-09

LIGHTING (contd.)

	EX	PR
Pull Point		
Handhole		
Heavy Duty Handhole		
Junction Box		
Light Unit Comb.		
Electrical Ground		
Traffic Flow Arrow		
High Mast Pole (Half Size)		
Light Unit-1		

PAVEMENT (MISC.)

	EX	PR
Keyed Long. Joint		
Keyed Long. Joint w/Tie Bars		
Sawed Long. Joint w/Tie Bars		
Bituminous Shoulder		
Bituminous Taper		
Stabilized Driveway		
Widening		

PAVEMENT MARKINGS

	EX	PR
Handicap Symbol		
RR Crossing		
Raised Marker Amber 1 Way		
Raised Marker Amber 2 Way		
Raised Marker Crystal 1 Way		
Two Way Turn Left		
Shoulder Diag. Pattern		
Skip-Dash White		
Skip-Dash Yellow		
Stop Line		
Solid Line		
Double Centerline		
Dotted Lines		

Illinois Department of Transportation

APPROVED January 1, 2026
ENGINEER OF POLICY AND PROCEDURES

APPROVED January 1, 2026
ENGINEER OF DESIGN AND ENVIRONMENT

ISSUED 1-1-97

STANDARD SYMBOLS, ABBREVIATIONS, AND PATTERNS

STANDARD 000001-09

PAVEMENT MARKINGS (contd.)

	EX	PR
CL 2Ln 2Way RRPM 12.2 m (40') o.c.		
CL 2Ln 2Way RRPM 80' (24.4 m) o.c.		
CL Multilane Div. RRPM 40' (12.2 m) o.c.		
CL Multilane Div. RRPM 80' (24.4 m) o.c.		
CL Multilane Div. Dbl. RRPM 80' (24.4 m) o.c.		
CL Multilane Undiv.		
Two Way Turn Left Line		
Urban Combination Left		
Urban Combination Right		
Urban Left Turn Arrow		
Urban Right Turn Arrow		
Urban Left Turn Only		
Urban Right Turn Only		
Urban Thru Only		
Urban LT & RT Turn Arrow		
Urban Thru Arrow		

RAILROAD ITEMS

	EX	PR
Abandoned Railroad		
Railroad		
Railroad Point		
Control Box		
Crossing Gate		
Flashing Signal		
Railroad Cant. Mast Arm		
Crossbuck		

REMOVAL ITEMS

	EX	PR
Removal Tic		
Bituminous Removal		
Hatch Pattern		
Tree Removal Single		

RIGHT OF WAY ITEMS

	EX	PR
Future ROW Corner Monument		
ROW Marker		
ROW Line		
Easement		
Temporary Easement		

Illinois Department of Transportation

APPROVED January 1, 2026
ENGINEER OF POLICY AND PROCEDURES

APPROVED January 1, 2026
ENGINEER OF DESIGN AND ENVIRONMENT

ISSUED 1-1-97

STANDARD SYMBOLS, ABBREVIATIONS, AND PATTERNS

STANDARD 000001-09

PAVEMENT MARKINGS (contd.)

	EX	PR
Urban U-Turn		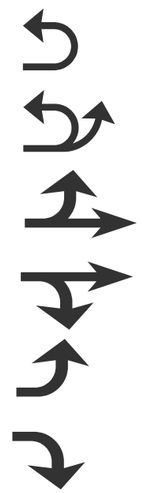
Urban Combined U-Turn		
Rural Combination Left		
Rural Combination Right		
Rural Left Turn Arrow		
Rural Right Turn Arrow		
Rural Left Turn Only		
Rural Right Turn Only		
Rural Thru Only		
Rural Thru Arrow		
Rural Lt & Rt Turn Arrow		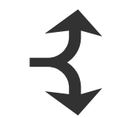
Bike Lane Symbol		
Bike Lane Text		
Bike Path Shared		
Bike Shared Roadway		
Lane Drop Symbol		
Wrong Way Arrow		

Illinois Department of Transportation

APPROVED January 1, 2026
Marshall R. Metcalf
ENGINEER OF POLICY AND PROCEDURES

APPROVED January 1, 2026
Todd Cox
ENGINEER OF DESIGN AND ENVIRONMENT

ISSUED 1-1-97

STANDARD SYMBOLS, ABBREVIATIONS, AND PATTERNS

STANDARD 000001-09

RIGHT OF WAY ITEMS (contd.)

	EX	PR
Access Control Line	AC	AC
Access Control Line & ROW	AC	AC
Access Control Line & ROW with Fence	AC	
Excess ROW Line		XS

ROADWAY PLAN ITEMS

	EX	PR
Cable Barrier		
Concrete Barrier		
Edge of Pavement		
Bit Shoulders, Medians and C&G Line		
Aggregate Shoulder		
Sidewalks, Driveways		
Guardrail		
Guardrail Post		
Traffic Sign		
Corrugated Median		
Impact Attenuator		
North Arrow with District Office (Half Size)	N	
Match Line		STA. 45+00
Slope Limit Line		
Typical Cross-Section Line		

Illinois Department of Transportation

APPROVED January 1, 2026
ENGINEER OF POLICY AND PROCEDURES

APPROVED January 1, 2026
ENGINEER OF DESIGN AND ENVIRONMENT

ISSUED 1-1-97

ROADWAY PROFILES

	EX	PR
P.I. Indicator		
Point Indicator		
Earthworks Balance Point		
Begin Point		
Vert. Curve Data	VPI = ELEV= L = E =	VPI = ELEV= L = E =
Ditch Profile Left Side		
Ditch Profile Right Side		
Roadway Profile Line		
Storm Sewer Profile Left Side		
Storm Sewer Profile Right Side		

SIGNING ITEMS

	EX	PR
Cone, Drum or Barricade		
Barricade Type II		
Barricade Type III		
Barricade With Edge Line		
Flashing Light Sign		
Vertical Panels		
Direction of Traffic		
Sign Flag (Half Size)		
Reverse Left W1-4L (Half Size)		
Reverse Right W1-4R (Half Size)		

SIGNING ITEMS (contd.)

	EX	PR
Two Way Traffic Sign W6-3 (Half Size)		
Detour Ahead W20-2(O) (Half Size)		DETOUR AHEAD
Left Lane Closed Ahead W20-5L(O) (Half Size)		LEFT LANE CLOSED AHEAD
Right Lane Closed Ahead W20-5R(O) (Half Size)		RIGHT LANE CLOSED AHEAD
Road Closed Ahead W20-3(O) (Half Size)		ROAD CLOSED AHEAD
Road Construction Ahead W20-I103(O) (Half Size)		ROAD CONSTRUCTION AHEAD
One Lane Road Ahead W20-4(O) (Half Size)		ONE LANE ROAD AHEAD
Lane Ends W4-2R(O) (Half Size)		
Lane Ends W4-2L(O) (Half Size)		
One Way Arrow Lrg. W1-6-(O) (Half Size)		
Two Way Arrow Large W1-7-(O) (Half Size)		

STANDARD SYMBOLS, ABBREVIATIONS, AND PATTERNS

STANDARD 000001-09

SIGNING ITEMS (contd.)

	EX	PR
Detour M4-10L-(O) (Half Size)		DETOUR
Detour M4-10R-(O) (Half Size)		DETOUR
One Way Left R6-1L (Half Size)		ONE WAY
One Way Right R6-1R (Half Size)		ONE WAY
Left Turn Lane R3-I100L (Half Size)		LEFT TURN LANE
Keep Right R4-7		
Keep Right R4-7AR (Half Size)		KEEP RIGHT
Keep Left R4-8		
Keep Left R4-8AL (Half Size)		KEEP LEFT
Stop Here On Red R10-6-AL (Half Size)		STOP HERE ON RED
Stop Here On Red R10-6-AR (Half Size)		STOP HERE ON RED
No Left Turn R3-2 (Half Size)		
No Right Turn R3-1 (Half Size)		
Road Closed R11-2 (Half Size)		ROAD CLOSED
Road Closed Thru Traffic R11-4 (Half Size)		ROAD CLOSED TO THRU TRAFFIC

Illinois Department of Transportation

APPROVED January 1, 2026
Marshall R. Metcalf
ENGINEER OF POLICY AND PROCEDURES

APPROVED January 1, 2026
Scott Cox
ENGINEER OF DESIGN AND ENVIRONMENT

ISSUED 1-1-97

STRUCTURES ITEMS

	EX	PR
Box Culvert Barrel		
Box Culvert Headwall		
Bridge Pier		
Bridge		
Retaining Wall		
Temporary Sheet Piling		

TRAFFIC SHEET ITEMS

	EX	PR
Cable Number		
Left Turn Green	G	G
Left Turn Yellow	Y	Y
Signal Backplate		
Signal Section 8" (200 mm)		
Signal Section 12" (300 mm)		
Walk/Don't Walk Letters	DW W	DW W
Walk/Don't Walk Symbols		

TRAFFIC SIGNAL ITEMS

	EX	PR
Galv. Steel Conduit		
Underground Cable		
Detector Loop Line		
Detector Loop Large		
Detector Loop Small		
Detector Loop Quadrapole		
Detector Raceway	"E"	
Aluminum Mast Arm		
Steel Mast Arm		
Veh. Detector Magnetic		
Conduit Splice		

TRAFFIC SIGNAL ITEMS (contd.)

	EX	PR
Controller		
Gulfbox Junction		
Wood Pole		
Temp. Signal Head		
Handhole		
Double Handhole		
Heavy Duty Handhole	H	H
Junction Box	J	J
Ped. Pushbutton Detector		
Ped. Signal Head		
Power Pole Service		
Priority Veh. Detector		
Signal Head		
Signal Head w/Backplate		
Signal Post		
Closed Circuit TV	C	C
Video Detector System	V	V

UNDERGROUND UTILITY ITEMS

	EX	PR	ABANDONED
Cable TV	TV CTV CTV	CTV CTV	CTV CTV CTV
Electric Cable	E E	E E	E E E
Fiber Optic	FO FO	FO FO F	FO FO FO
Gas Pipe	G	G	G
Oil Pipe	O	O	O
Sanitary Sewer			
Telephone Cable	T T T	T T T	T T T
Water Pipe	W	W	W

STANDARD SYMBOLS, ABBREVIATIONS, AND PATTERNS

(Sheet 8 of 9)

STANDARD 000001-09

UTILITIES ITEMS	EX	PR
Controller		
Double Handhole		
Fire Hydrant		
GuyWire or Deadman Anchor		
Handhole		
Heavy Duty Handhole		
Junction Box		
Light Pole		
Manhole		
Monitoring Well (Gasoline)		
Pipeline Warning Sign		
Power Pole		
Power Pole with Light		
Sanitary Sewer Cleanout		
Splice Box Above Ground		
Telephone Splice Box Above Ground		
Telephone Pole		
Traffic Signal		
Traffic Signal Control Box		
Water Meter		
Water Meter Valve Box		
Profile Line		
Aerial Power Line	A A A	A A A

VEGETATION ITEMS	EX	PR
Deciduous Tree		
Bush or Shrub		
Evergreen Tree		
Stump		
Orchard/Nursery Line		
Vegetation Line		
Woods & Bush Line		

WATER FEATURE ITEMS	EX	PR
Stream or Drainage Ditch		
Waters Edge		
Water Surface Indicator		
Water Point		
Disappearing Ditch		
Marsh		
Marsh/Swamp Boundary		

Illinois Department of Transportation

APPROVED January 1, 2026
ENGINEER OF POLICY AND PROCEDURES

APPROVED January 1, 2026
ENGINEER OF DESIGN AND ENVIRONMENT

ISSUED 1-1-97

STANDARD SYMBOLS, ABBREVIATIONS, AND PATTERNS

STANDARD 000001-09

DECIMAL OF AN INCH AND OF A FOOT

A	B	A	B	A	B	A	B	A	B	A	B
0.0052	1/16	11/64 0.171875	2 1/16	0.3385	4 1/16	0.5052	6 1/16	43/64 0.671875	8 1/16	0.8385	10 1/16
0.0104	1/8	0.1771	2 1/8	11/32 0.34375	4 1/8	0.5104	6 1/8	0.6771	8 1/8	27/32 0.84375	10 1/8
1/64 0.015625	3/16	0.1823	2 3/16	0.3490	4 3/16	33/64 0.515625	6 3/16	0.6823	8 3/16	0.8490	10 3/16
0.0208	1/4	3/16 0.1875	2 1/4	0.3542	4 1/4	0.5208	6 1/4	11/16 0.6875	8 1/4	0.8542	10 1/4
0.0260	5/16	0.1927	2 5/16	23/64 0.359375	4 5/16	0.5260	6 5/16	0.6927	8 5/16	55/64 0.859375	10 5/16
1/32 0.03125	3/8	0.1979	2 3/8	0.3646	4 3/8	17/32 0.53125	6 3/8	0.6979	8 3/8	0.8646	10 3/8
0.0365	7/16	13/64 0.203125	2 7/16	0.3698	4 7/16	0.5365	6 7/16	45/64 0.703125	8 7/16	0.8698	10 7/16
0.0417	1/2	0.2083	2 1/2	3/8 0.3750	4 1/2	0.5417	6 1/2	0.7083	8 1/2	7/8 0.8750	10 1/2
3/64 0.046875	9/16	0.2135	2 9/16	0.3802	4 9/16	35/64 0.546875	6 9/16	0.7135	8 9/16	0.8802	10 9/16
0.0521	5/8	7/32 0.21875	2 5/8	0.3854	4 5/8	0.5521	6 5/8	23/32 0.71875	8 5/8	0.8854	10 5/8
0.0573	11/16	0.2240	2 11/16	25/64 0.390625	4 11/16	0.5573	6 11/16	0.7240	8 11/16	57/64 0.890625	10 11/16
1/16 0.0625	3/4	0.2292	2 3/4	0.3958	4 3/4	9/16 0.5625	6 3/4	0.7292	8 3/4	0.8958	10 3/4
0.0677	13/16	15/64 0.234375	2 13/16	0.4010	4 13/16	0.5677	6 13/16	47/64 0.734375	8 13/16	0.9010	10 13/16
0.0729	7/8	0.2396	2 7/8	13/32 0.40625	4 7/8	0.5729	6 7/8	0.7396	8 7/8	29/32 0.90625	10 7/8
5/64 0.078125	15/16	0.2448	2 15/16	0.4115	4 15/16	37/64 0.578125	6 15/16	0.7448	8 15/16	0.9115	10 15/16
0.0833	1	1/4 0.2500	3	0.4167	5	0.5833	7	3/4 0.7500	9	0.9167	11
0.0885	1 1/16	0.2552	3 1/16	27/64 0.421875	5 1/16	0.5885	7 1/16	0.7552	9 1/16	59/64 0.921875	11 1/16
3/32 0.09375	1 1/8	0.2604	3 1/8	0.4271	5 1/8	19/32 0.59375	7 1/8	0.7604	9 1/8	0.9271	11 1/8
0.0990	1 3/16	17/64 0.265625	3 3/16	0.4323	5 3/16	0.5990	7 3/16	49/64 0.765625	9 3/16	0.9323	11 3/16
0.1042	1 1/4	0.2708	3 1/4	7/16 0.4375	5 1/4	0.6042	7 1/4	0.7708	9 1/4	15/16 0.9375	11 1/4
7/64 0.109375	1 5/16	0.2760	3 5/16	0.4427	5 5/16	39/64 0.609375	7 5/16	0.7760	9 5/16	0.9427	11 5/16
0.1146	1 3/8	9/32 0.28125	3 3/8	0.4479	5 3/8	0.6146	7 3/8	25/32 0.78125	9 3/8	0.9479	11 3/8
0.1198	1 7/16	0.2865	3 7/16	29/64 0.453125	5 7/16	0.6198	7 7/16	0.7865	9 7/16	61/64 0.953125	11 7/16
1/8 0.1250	1 1/2	0.2917	3 1/2	0.4583	5 1/2	5/8 0.6250	7 1/2	0.7917	9 1/2	0.9583	11 1/2
0.1302	1 9/16	19/64 0.296875	3 9/16	0.4635	5 9/16	0.6302	7 9/16	51/64 0.796875	9 9/16	0.9635	11 9/16
0.1354	1 5/8	0.3021	3 5/8	15/32 0.46875	5 5/8	0.6354	7 5/8	0.8021	9 5/8	31/32 0.96875	11 5/8
9/64 0.140625	1 11/16	0.3073	3 11/16	0.4740	5 11/16	41/64 0.640625	7 11/16	0.8073	9 11/16	0.9740	11 11/16
0.1458	1 3/4	5/16 0.3125	3 3/4	0.4792	5 3/4	0.6458	7 3/4	13/16 0.8125	9 3/4	0.9792	11 3/4
0.1510	1 13/16	0.3177	3 13/16	31/64 0.484375	5 13/16	0.6510	7 13/16	0.8177	9 13/16	63/64 0.984375	11 13/16
5/32 0.15625	1 7/8	0.3229	3 7/8	0.4896	5 7/8	21/32 0.65625	7 7/8	0.8229	9 7/8	0.9896	11 7/8
0.1615	1 15/16	21/64 0.328125	3 15/16	0.4948	5 15/16	0.6615	7 15/16	53/64 0.828125	9 15/16	0.9948	11 15/16
0.1667	2	0.3333	4	1/2 0.5000	6	0.6667	8	0.8333	10	1 1.0000	12

A = Fractions of Inch or Foot

B = Inch Equivalents to Foot Fractions

Illinois Department of Transportation

APPROVED January 1, 1997
ENGINEER OF POLICY AND PROCEDURES

APPROVED January 1, 1997
ENGINEER OF DESIGN AND ENVIRONMENT

ISSUED 1-1-97

DATE	REVISIONS
1-1-97	New Standard.

DECIMAL OF AN INCH AND OF A FOOT

STANDARD 001006

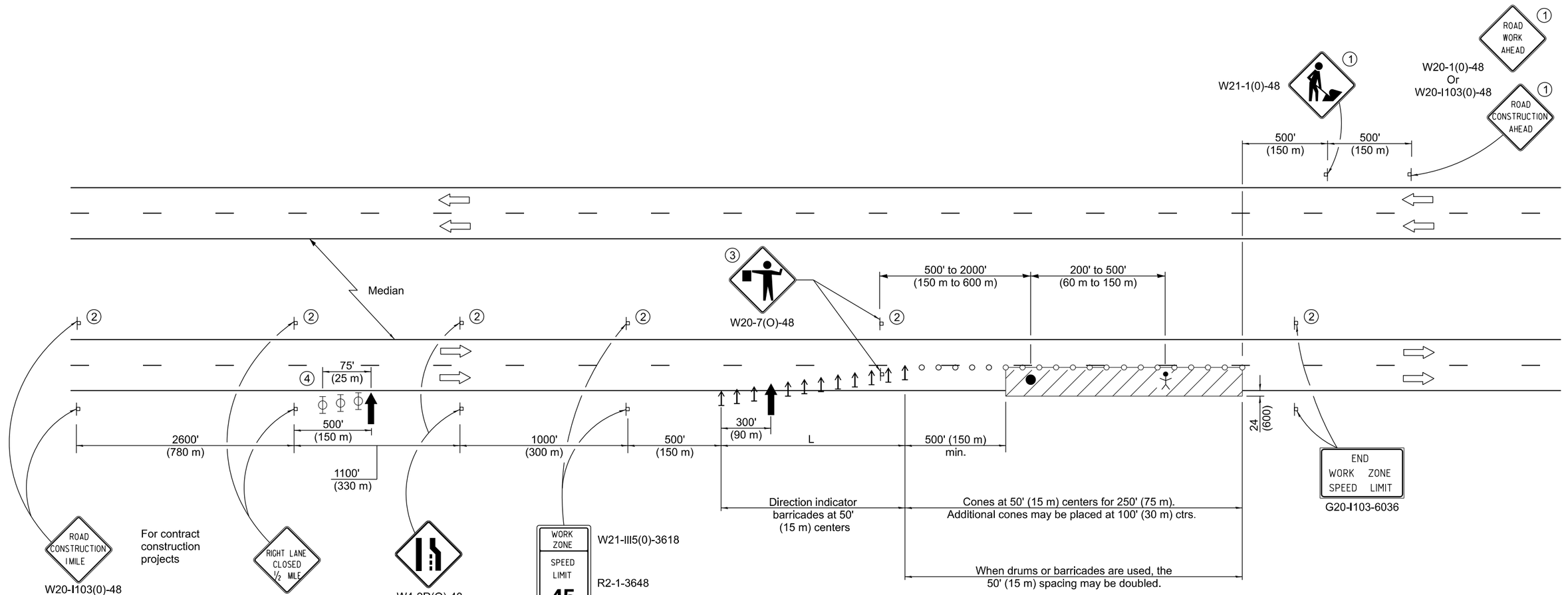

L = lane width X taper ratio	
Normal Posted Speed	Taper Ratio
mph	
55	55/1
45	45/1

TYPICAL APPLICATIONS

Pavement patch
Utility operations
Bituminous resurfacing

SYMBOLS

- Arrow board
- Work area
- Sign
- Direction indicator barricade
- Cone, drum or barricade
- Flagger with traffic control sign
- Worker
- Type II barricade, drum, or vertical barricade with monodirectional flashing light

1. Undivided roadway only with left lane closure in opposite direction.
2. Omitted when median is less than 10' (3 m).
3. FLAGGER signs shall be moved as necessary to maintain the required spacing between the sign and each separate work activity.
4. Three Type II barricades, drums, or vertical barricades at 25' (8 m) centers.

GENERAL NOTES

This Standard is used where at any time, any vehicle, equipment, workers or their activities will encroach on the lane adjacent to the shoulder, or on the shoulder within 24 (600) of the edge of pavement.

This Standard also applies when work is being performed in the left lane. Under these conditions, LEFT LANE CLOSED signs shall be substituted for RIGHT LANE CLOSED signs. On undivided highways, signs shall be added in the opposite direction as shown.

All dimensions are in inches (millimeters) unless otherwise shown.

Illinois Department of Transportation

APPROVED January 1, 2017
ENGINEER OF SAFETY PROG. AND ENGINEERING
APPROVED January 1, 2017
ENGINEER OF DESIGN AND ENVIRONMENT

ISSUED 4-1-04

DATE	REVISIONS
1-1-17	Revised END WORK ZONE SPEED
	LIMIT sign. Changed device spacing
	at first arrow board.
1-1-15	Revised END WORK ZONE SPEED
	LIMIT sign dimensions.

LANE CLOSURE, MULTILANE, DAY OPERATIONS ONLY, FOR SPEEDS ≥ 45 MPH TO 55 MPH

STANDARD 701421-08

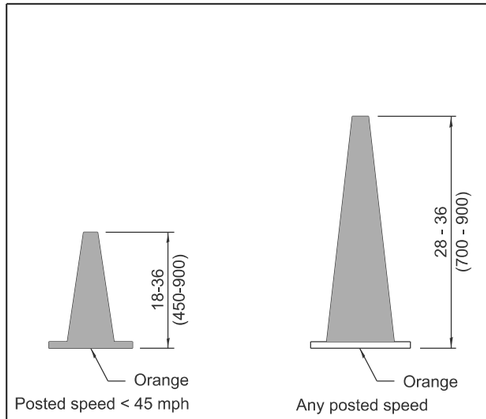

DAYTIME USE

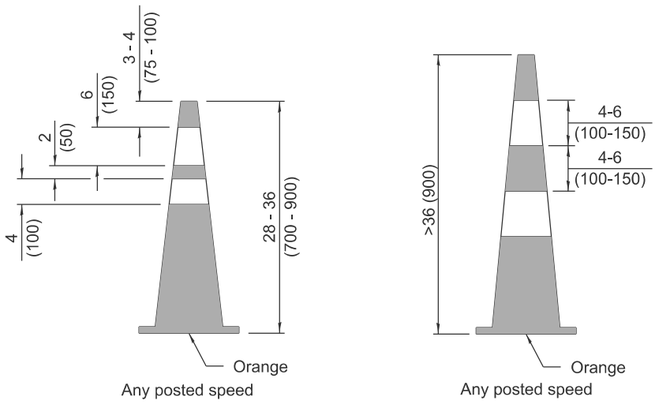

DAY OR NIGHTTIME USE

CONES

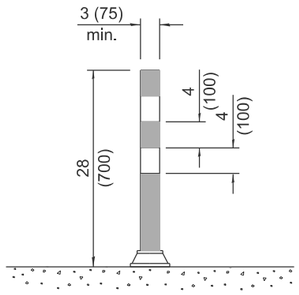

TUBULAR MARKER

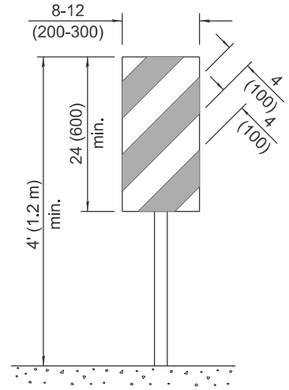

VERTICAL PANEL
POST MOUNTED

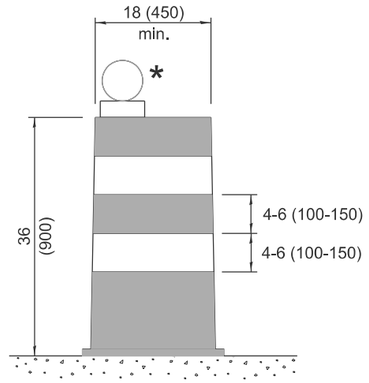

DRUM

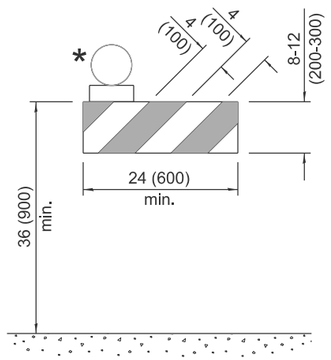

TYPE I BARRICADE

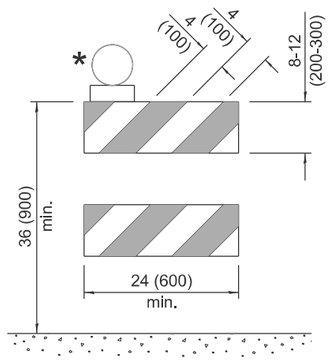

TYPE II BARRICADE

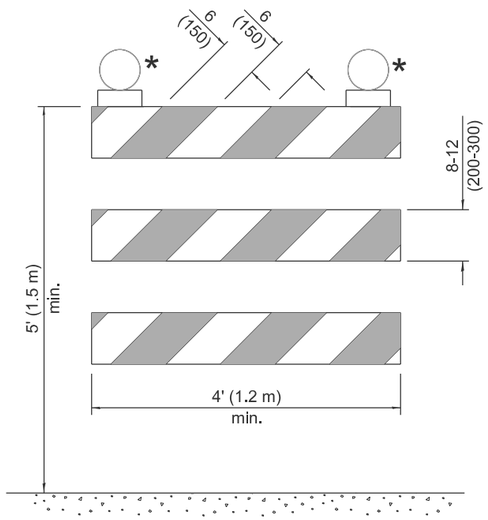

TYPE III BARRICADE

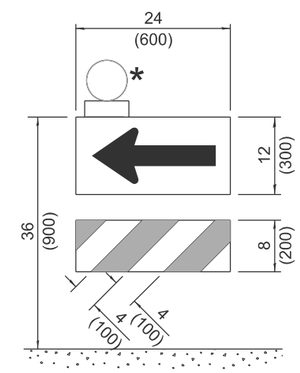

DIRECTION INDICATOR BARRICADE

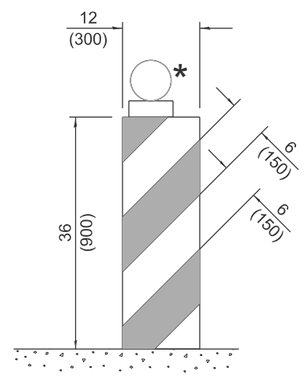

VERTICAL BARRICADE

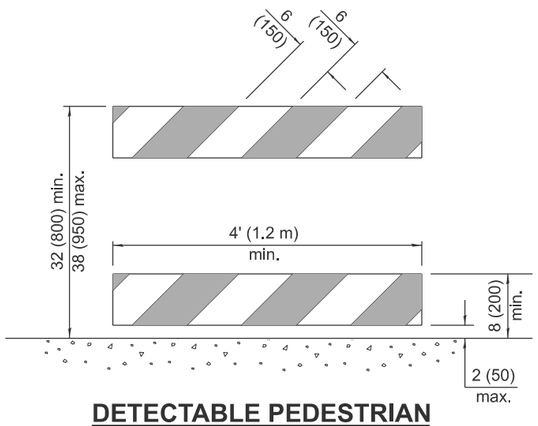

DETECTABLE PEDESTRIAN CHANNELIZING BARRICADE

* Warning lights (if required)

GENERAL NOTES

All heights shown shall be measured above the pavement surface.

All dimensions are in inches (millimeters) unless otherwise shown.

Illinois Department of Transportation

APPROVED January 1, 2026
ENGINEER OF SAFETY PROG. AND ENGINEERING

APPROVED January 1, 2026
ENGINEER OF DESIGN AND ENVIRONMENT

ISSUED 1-1-13

DATE	REVISIONS
1-1-26	Updated Detectable Pedestrian
	Channelizing Barricade (sht. 1) &
	Temporary Rumble Strips
	details (sht. 3)
1-1-25	Updated Temporary Rumble
	Strip Detail (sht. 3).

TRAFFIC CONTROL DEVICES

(Sheet 1 of 3)

STANDARD 701901-11

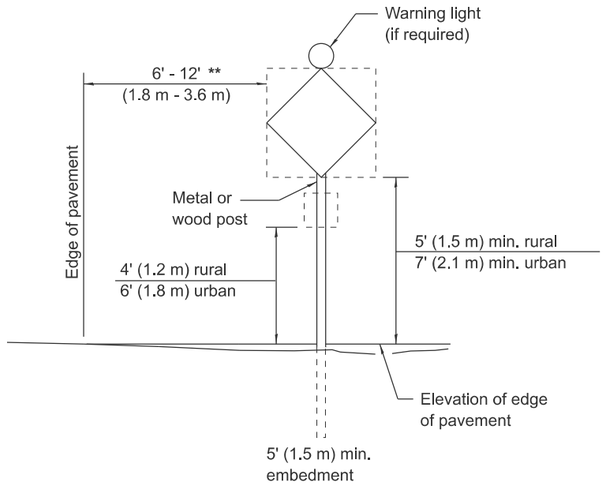

POST MOUNTED SIGNS

** When curb or paved shoulder are present this dimension shall be 24 (600) to the face of curb or 6' (1.8 m) to the outside edge of the paved shoulder.

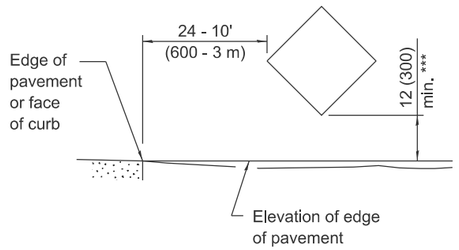

SIGNS ON TEMPORARY SUPPORTS

*** When work operations exceed four days, this dimension shall be 5' (1.5 m) min. If located behind other devices, the height shall be sufficient to be seen completely above the devices.

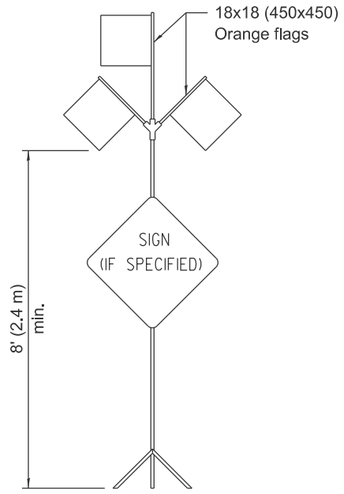

HIGH LEVEL WARNING DEVICE



G20-I104(0)-6036



G20-I105(0)-6024

This signing is required for all projects 2 miles (3200 m) or more in length.

ROAD CONSTRUCTION NEXT X MILES sign shall be placed 500' (150 m) in advance of project limits.

END CONSTRUCTION sign shall be erected at the end of the job unless another job is within 2 miles (3200 m).

Dual sign displays shall be utilized on multi-lane highways.

WORK LIMIT SIGNING

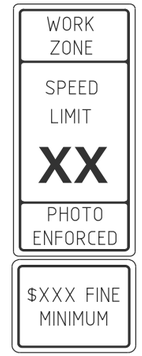

W21-III5(0)-3618

R2-1-3648

R10-I108p-3618 ****

R2-I106p-3618

Sign assembly as shown on Standards or as allowed by District Operations.

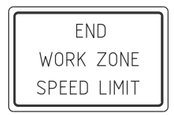

G20-I103-6036

This sign shall be used when the above sign assembly is used.

HIGHWAY CONSTRUCTION SPEED ZONE SIGNS

**** R10-I108p shall only be used along roadways under the juristiction of the State.

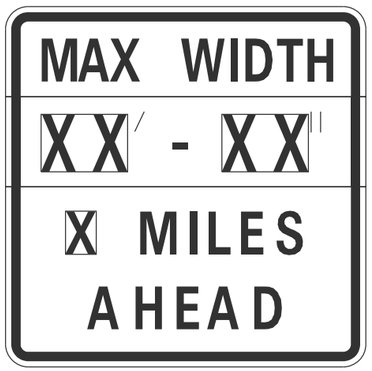

W12-I103-4848

WIDTH RESTRICTION SIGN

XX'-XX" width and X miles are variable.

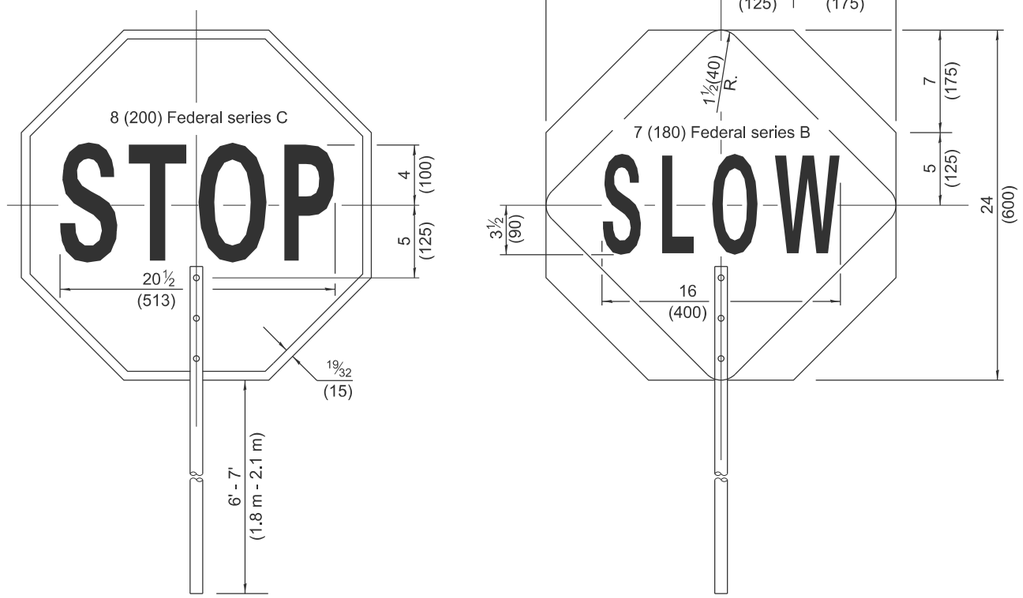

FRONT SIDE

REVERSE SIDE

FLAGGER TRAFFIC CONTROL SIGN

Illinois Department of Transportation

APPROVED January 1, 2026
ENGINEER OF SAFETY PROG. AND ENGINEERING

APPROVED January 1, 2026
ENGINEER OF DESIGN AND ENVIRONMENT

ISSUED 1-1-13

TRAFFIC CONTROL DEVICES

STANDARD 701901-11

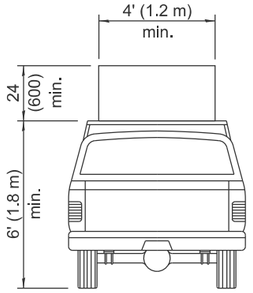

TYPE A ROOF MOUNTED

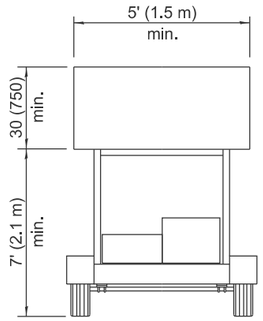

TYPE B ROOF OR TRAILER MOUNTED

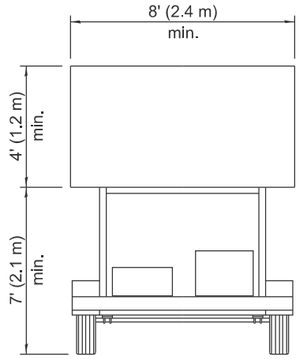

TYPE C TRAILER MOUNTED

ARROW BOARDS

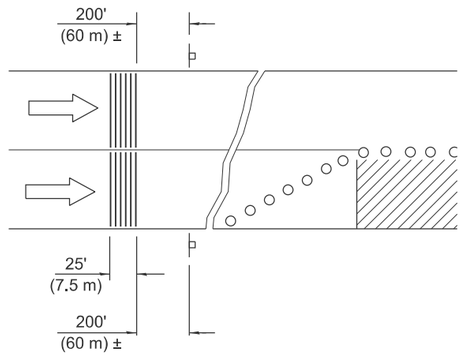

MULTI-LANE HIGHWAYS

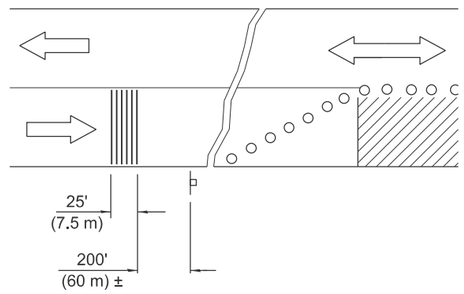

TWO-LANE HIGHWAYS

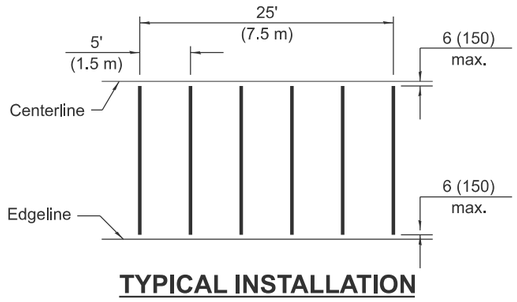

TYPICAL INSTALLATION

TEMPORARY RUMBLE STRIPS

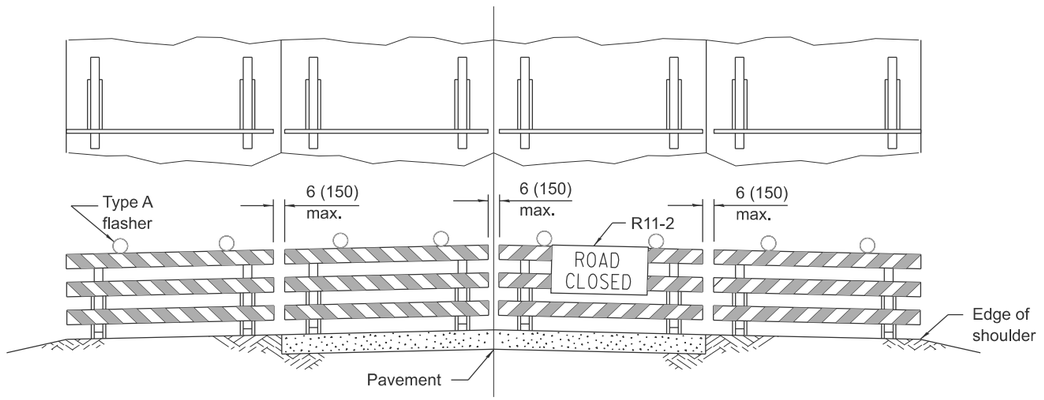

ROAD CLOSED TO ALL TRAFFIC

Reflectorized striping may be omitted on the back side of the barricades.

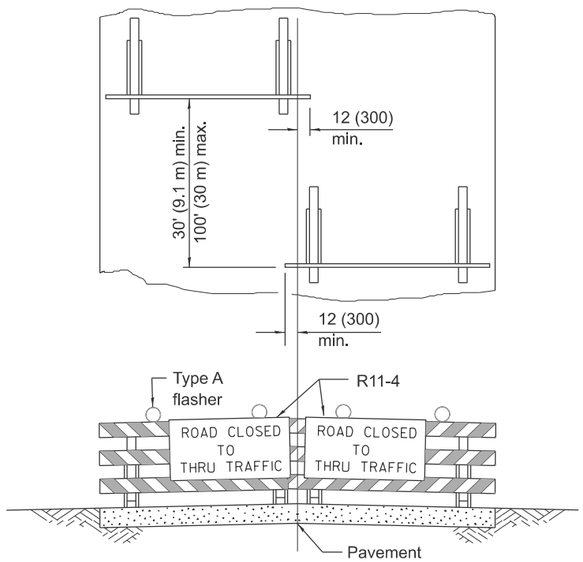

ROAD CLOSED TO THRU TRAFFIC

Reflectorized striping shall appear on both sides of the barricades.

TYPICAL APPLICATIONS OF TYPE III BARRICADES CLOSING A ROAD

If a Type III barricade with an attached sign panel which meets NCHRP 350 or MASH is not available, the sign may be mounted on an NCHRP 350 or MASH temporary sign support directly in front of the barricade.

Illinois Department of Transportation

APPROVED January 1, 2026
ENGINEER OF SAFETY PROG. AND ENGINEERING

APPROVED January 1, 2026
ENGINEER OF DESIGN AND ENVIRONMENT

ISSUED 1-1-13

TRAFFIC CONTROL DEVICES

(Sheet 3 of 3)

STANDARD 701901-11

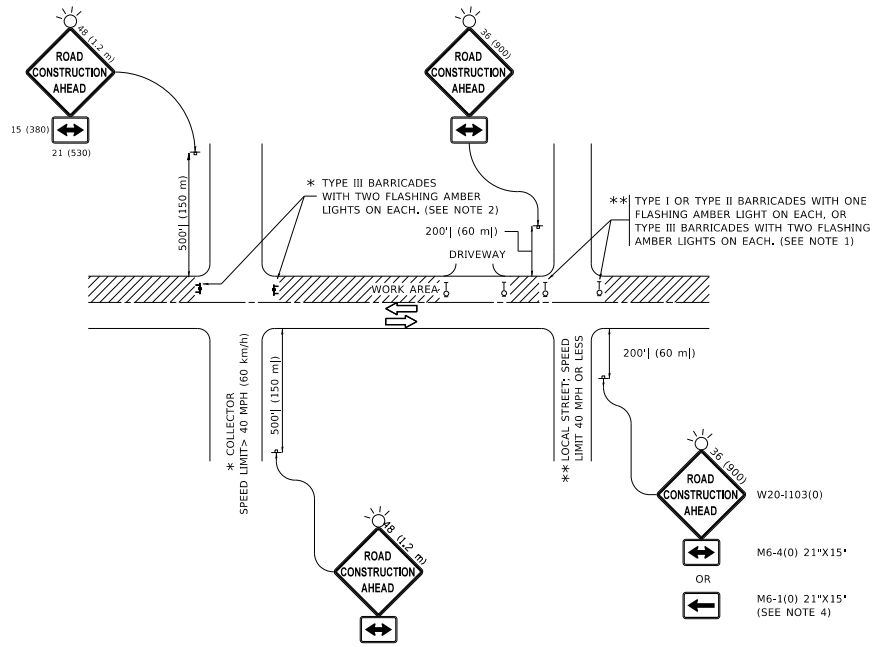

NOTES:

1. SIDE ROAD WITH A SPEED LIMIT OF 40 MPH (60 km/h) OR LESS AS SHOWN ON THE DRAWING AND AS DIRECTED BY THE ENGINEER:
   a) ONE "ROAD CONSTRUCTION AHEAD" SIGN 36 x 36 (900x900) WITH A FLASHER MOUNTED ON IT APPROXIMATELY 200' (60 m) IN ADVANCE OF THE MAIN ROUTE.
   b) THE CLOSED PORTION OF THE MAIN ROUTE SHALL BE PROTECTED BY BLOCKING WITH TYPE I, TYPE II OR TYPE III BARRICADES, 1/3 OF THE CROSS SECTION OF THE CLOSED PORTION.
2. SIDE ROAD WITH A SPEED LIMIT GREATER THAN 40 MPH (60 km/h) AS SHOWN ON THE DRAWING AND AS DIRECTED BY THE ENGINEER:
   a) ONE "ROAD CONSTRUCTION AHEAD" SIGN 48 x 48 (1.2 m x 1.2 m) WITH A FLASHER MOUNTED ON IT APPROXIMATELY 500' (150 m) IN ADVANCE OF THE MAIN ROUTE.
   b) THE CLOSED PORTION OF THE MAIN ROUTE SHALL BE PROTECTED BY BLOCKING WITH TYPE III BARRICADES, 1/2 OF THE CROSS SECTION OF THE CLOSED PORTION.
3. CONES MAY BE SUBSTITUTED FOR BARRICADES OR DRUMS AT HALF THE SPACING DURING DAY OPERATIONS. CONES SHALL BE A MINIMUM OF 28 (710) IN HEIGHT.
4. WHEN THE SIDE ROAD LIES BETWEEN THE BEGINNING OF THE MAINLINE SIGNING AND THE WORK ZONE, A SINGLE HEADED ARROW (M6-1) SHALL BE USED IN LIEU OF THE DOUBLE HEADED ARROW (M6-4).
5. WHEN WORK IS BEING PERFORMED ON A SIDE ROAD OR DRIVEWAY, FOLLOW THE APPLICABLE STANDARD(S). THE DIRECTIONAL ARROW (M6-1 OR M6-4) SHALL BE COVERED OR REMOVED WHEN NO LONGER CONSISTENT WITH THE TRAFFIC CONTROL SET-UP.
6. ADVANCE WARNING SIGNS ARE TO BE OMITTED ON DRIVEWAYS UNLESS OTHERWISE SPECIFIED IN THE PLANS OR BY THE ENGINEER.
7. THE TRAFFIC CONTROL AND PROTECTION FOR SIDE ROADS, INTERSECTIONS, AND DRIVEWAYS SHALL BE INCLUDED IN THE COST OF SPECIFIED TRAFFIC CONTROL STANDARDS OR ITEMS.

All dimensions are in inches (millimeters) unless otherwise shown.

MODEL: Default
FILE NAME: pw:\\dot-pw-be-01.pw.cms:PWIDOT\Documents\IDOT Offices\Patrick - 11\tc10ctrldrtsd223x34\CADData\CADSheets\tc10.dgn

USER NAME = Lawrence.DeManche	DESIGNED - L.H.A.	REVISED - T. RAMMACHER 01-06-00
	DRAWN -	REVISED - A. SCHUETZE 07-01-13
PLOT SCALE = 100.0000 ' / In.	CHECKED -	REVISED - A. SCHUETZE 09-15-16
PLOT DATE = 5/3/2024	DATE - 06-89	REVISED - D. SENDERAK 05-03-24

STATE OF ILLINOIS
DEPARTMENT OF TRANSPORTATION

TRAFFIC CONTROL AND PROTECTION FOR SIDE ROADS, INTERSECTIONS, AND DRIVEWAYS

SCALE: NONE | SHEET 1 OF 1 SHEETS | STA. | TO STA.

F.A. RTE.	SECTION	COUNTY	TOTAL SHEETS	SHEET NO.
	TC-10	CONTRACT NO.		
	ILLINOIS FED. AID PROJECT			

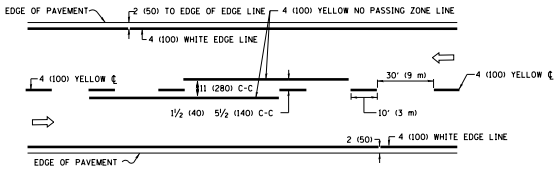

2–LANE ROADWAY

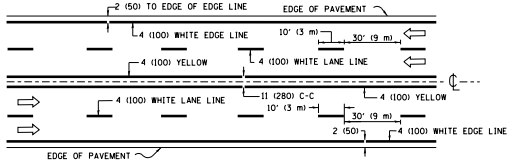

MULTI–LANE UNDIVIDED

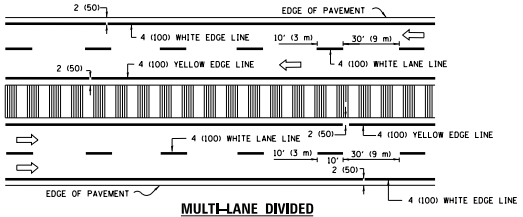

MULTI–LANE DIVIDED
WITH MEDIAN

TYPICAL LANE AND EDGE LINE MARKING

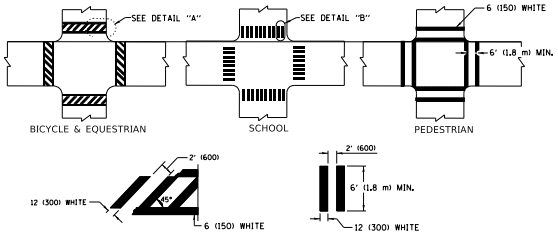

DETAIL "A" **DETAIL "B"**

TYPICAL CROSSWALK MARKING

✳ MARKINGS SHALL BE INSTALLED PARALLEL TO THE CENTERLINE OF THE ROAD WHICH IT CROSSES

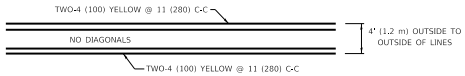

4' (1.2 m) WIDE MEDIANS ONLY

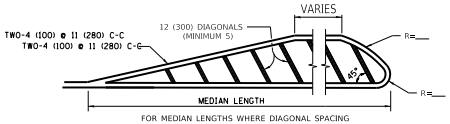

FOR MEDIAN LENGTHS WHERE DIAGONAL SPACING CANNOT BE ATTAINED, USE 5 (FIVE) EQUALLY SPACED DIAGONAL LINES.

DIAGONAL LINE SPACING: 50' (15 m) C-C (LESS THAN 30MPH (50 km/h))
75' (25 m) C-C 30MPH (50 km/h) TO 45MPH (70 km/h))
150' (45 m) C-C (MORE THAN 45MPH (70 km/h))

MEDIANS OVER 4' (1.2 m) WIDE

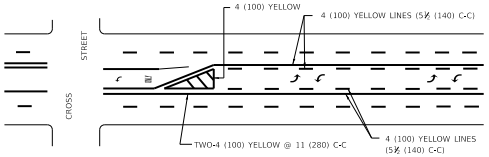

A MINIMUM OF TWO PAIRS OF TURN ARROWS SHALL BE USED. WHITE IN COLOR. ADDITIONAL PAIRS SHALL BE PLACED AT 200' (60 m) TO 300' (90 m) INTERVALS.

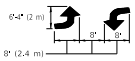

MEDIAN WITH TWO–WAY LEFT TURN LANE

TYPICAL PAINTED MEDIAN MARKING

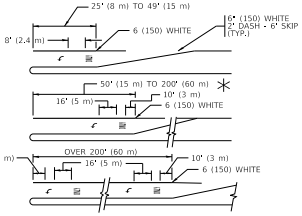

FULL SIZE LETTERS 8' (2.4 m) AND ARROWS SHALL BE USED.
AREA = 15.6 SQ. FT. (1.5 m²) **ONLY** AREA = 20.8 SQ. FT. (1.9 m²

✳ TURN LANES IN EXCESS OF 400' (120 m) IN LENGTH MAY HAVE AN ADDITIONAL SET OF ARROW - "ONLY" INSTALLED MIDWAY BETWEEN THE OTHER TWO SETS OF ARROW - "ONLY".

TYPICAL LEFT (OR RIGHT) TURN LANE

TYPICAL TURN LANE MARKING

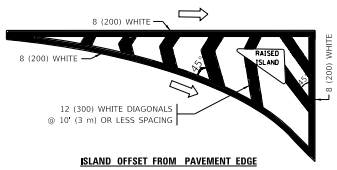

ISLAND OFFSET FROM PAVEMENT EDGE

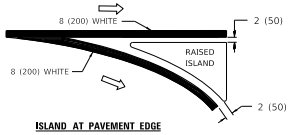

ISLAND AT PAVEMENT EDGE

TYPICAL ISLAND MARKING

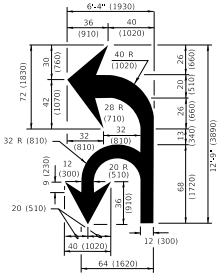

COMBINATION LEFT AND U–TURN

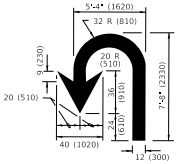

U–TURN

D(FT)	SPEED LIMIT
345	30
425	35
500	40
580	45
665	50
750	55

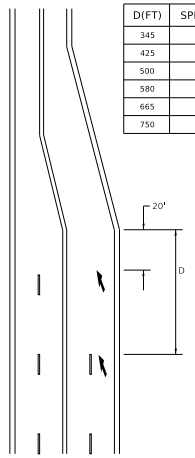

LANE REDUCTION TRANSITION

✳ LANE REDUCTION ARROWS REQUIRED AT SPEEDS OF 45 MPH OR GREATER OR WHEN SPECIFIED IN PLANS.

TYPE OF MARKING	WIDTH OF LINE	PATTERN	COLOR	SPACING / REMARKS
CENTERLINE ON 2 LANE PAVEMENT	4 (100)	SKIP-DASH	YELLOW	10' (3 m) LINE WITH 30' (9 m) SPACE
CENTERLINE ON MULTI-LANE UNDIVIDED PAVEMENT	2 @ 4 (100)	SOLID	YELLOW	11 (280) C-C
NO PASSING ZONE LINES: FOR ONE DIRECTION FOR BOTH DIRECTIONS	**4 (100)** 2 @ 4 (100)	SOLID SOLID	YELLOW YELLOW	5½ (140) C-C FROM SKIP-DASH CENTERLINE 11 (280) C-C OMIT SKIP-DASH CENTERLINE BETWEEN
LANE LINES	4 (100) 5 (125) ON FREEWAYS	SKIP-DASH SKIP-DASH	WHITE WHITE	10' (3 m) LINE WITH 30' (9 m) SPACE
DOTTED LINES (EXTENSIONS OF CENTER, LANE OR TURN LANE MARKINGS)	SAME AS LINE BEING EXTENDED	SKIP-DASH	SAME AS LINE BEING EXTENDED	2' (600) LINE WITH 6' (1.8 m) SPACE
EDGE LINES	4 (100)	SOLID	YELLOW-LEFT WHITE-RIGHT	OUTLINE MEDIANS IN YELLOW
TURN LANE MARKINGS	6 (150) LINE; FULL SIZE LETTERS & SYMBOLS (8' (2.4m))	SOLID	WHITE	SEE TYPICAL TURN LANE MARKING DETAIL
TWO WAY LEFT TURN MARKING	2 @ 4 (100) EACH DIRECTION 8' (2.4m) LEFT ARROW	SKIP-DASH AND SOLID IN PAIRS	YELLOW WHITE	10' (3 m) LINE WITH 30' (9 m) SPACE FOR SKIP-DASH; 5½ (140) C-C BETWEEN SOLID LINE AND SKIP-DASH LINE SEE TYPICAL TWO-WAY LEFT TURN MARKING DETAIL
CROSSWALK LINES (PEDESTRIAN) A. DIAGONALS (BIKE & EQUESTRIAN) B. LONGITUDINAL BARS (SCHOOL)	2 @ 6 (150) 12 (300) @ 45° 12 (300) @ 90°	SOLID SOLID SOLID	WHITE WHITE WHITE	NOT LESS THAN 6' (1.8 m) APART 2' (600) APART 2' (600) APART SEE TYPICAL CROSSWALK MARKING DETAILS.
STOP LINES	24 (600)	SOLID	WHITE	PLACE 4' (1.2 m) IN ADVANCE OF AND PARALLEL TO CROSSWALK, IF PRESENT. OTHERWISE, PLACE AT DESIRED STOPPING POINT. PARALLEL TO CROSSROAD CENTERLINE, WHERE POSSIBLE
PAINTED MEDIANS	2 @ 4 (100) WITH 12 (300) DIAGONALS @ 45° NO DIAGONALS USED FOR 4' (1.2 m) WIDE MEDIANS	SOLID	YELLOW: TWO WAY TRAFFIC WHITE: ONE WAY TRAFFIC	11 (280) C-C FOR THE DOUBLE LINE SEE TYPICAL PAINTED MEDIAN MARKING.
GORE MARKING AND CHANNELIZING LINES	8 (200) WITH 12 (300) DIAGONALS @ 45°	**SOLID**	WHITE	DIAGONALS: 15' (4.5 m) C-C (LESS THAN 30MPH (50 km/h)) 20' (6 m) C-C 30MPH (50 km/h) TO 45MPH (70 km/h)) 30' (9 m) C-C (OVER 45MPH (70 km/h))
RAILROAD CROSSING	24 (600) TRANSVERSE LINES; "RR" IS 6' (1.8 m) LETTERS: 16 (400) LINE FOR "R"	**SOLID**	**WHITE**	SEE STATE STANDARD 780001 AREA OF: "R"=3.6 SQ. FT. (0.33 m² EACH "X"=54.0 SQ. FT. (5.0 m²
SHOULDER DIAGONALS (REQUIRED FOR SHOULDERS ≥ 8')	12 (300) @ 45°	**SOLID**	**WHITE - RIGHT** **YELLOW - LEFT**	50' (15 m) C-C (LESS THAN 30MPH (50 km/h)) 75' (25 m) C-C (30 MPH (50 km/h) TO 45MPH (70 km/h)) 150' (45 m) C-C (OVER 45MPH (70 km/h))
U TURN ARROW	SEE DETAIL	**SOLID**	**WHITE**	16.3 SF
2 ARROW COMBINATION LEFT AND U TURN	SEE DETAIL	SOLID	WHITE	30.4 SF

FOR FURTHER DETAILS ON PAVEMENT MARKING REFER TO STANDARD SPECIFICATIONS FOR ROAD AND BRIDGE CONSTRUCTION AND STATE STANDARD 780001.

All dimensions are in inches (millimeters) unless otherwise shown.

MODEL: Default
FILE NAME: pw:\\IL084EBSDNTEC.illinois.gov:DWGDOT\Documents\DOT Graphics\Projects\Districts\District 1\Projects\Districts\District 1 Projects\Districts\District 1 Projects\Districts\District 1

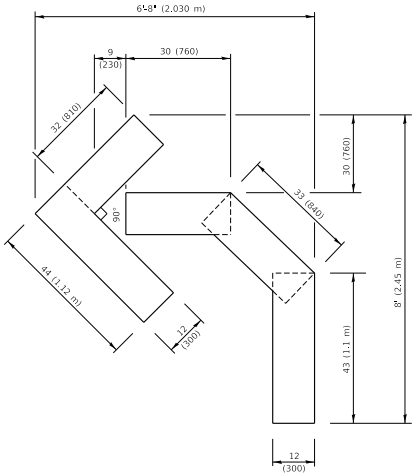

QUANTITY

4 (100) LINE = 45.5 ft. (13.9 m)
15.2 sq. ft. (1.41 sq. m)

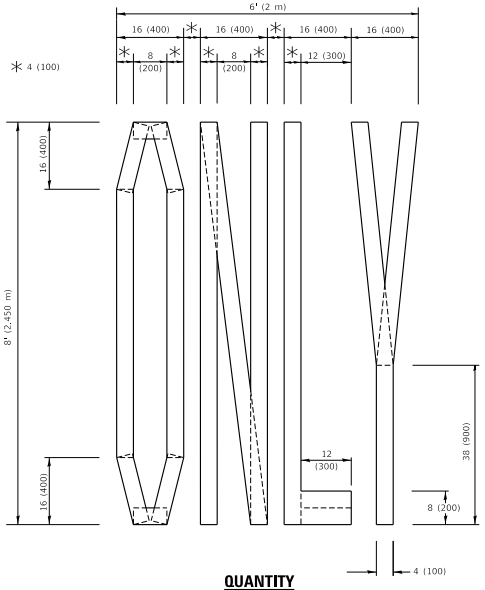

QUANTITY

4 (100) LINE = 64.1 ft. (19.5 m)
21.4 sq. ft. (1.99 sq. m)

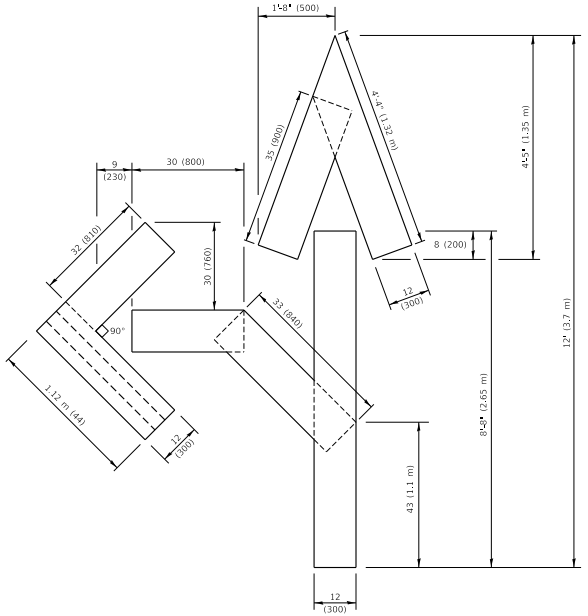

QUANTITY

4 (100) LINE = 82.5 ft. (25.1 m)
27.5 sq. ft. (2.53 sq. m)

NOTE:

ALL QUANTITIES OF PLACEMENT ARE REPRESENTED IN LINEAR FEET OF 4" LINES TO MATCH THE 4" TEMPORARY TAPE PAY ITEM AND REPRESENTS THE TOTAL QUANTITY OF 4" TAPE REQUIRED.

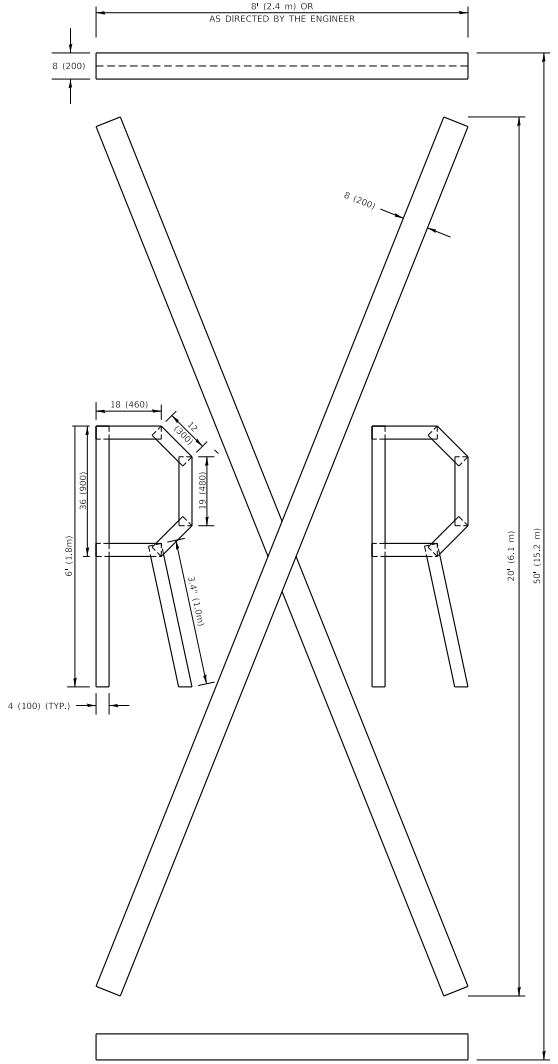

QUANTITY

4 (100) LINE = 225.9 ft. (68.9 m)
75.3 sq. ft. (6.99 sq. m)

All dimensions are in inches (millimeters) unless otherwise shown.

USER NAME = footemj	DESIGNED -	REVISED - T. RAMMACHER 03-02-98
	DRAWN -	REVISED - E. GOMEZ 08-28-00
PLOT SCALE = 50.0068 ' / in.	CHECKED -	REVISED - E. GOMEZ 08-28-00
PLOT DATE = 3/4/2019	DATE - 09-18-94	REVISED - A. SCHUETZE 09-15-16

STATE OF ILLINOIS
DEPARTMENT OF TRANSPORTATION

SHORT TERM PAVEMENT MARKING LETTERS AND SYMBOLS

SCALE: NONE | SHEET 1 OF 1 SHEETS | STA. | TO STA.

F.A. RTE.	SECTION	COUNTY	TOTAL SHEETS	SHEET NO.
	TC-16	CONTRACT NO.		
	ILLINOIS FED. AID PROJECT			

MODEL: Default
FILE NAME: pw:\\dot84ebintec.illinois.gov:PWIDOT\Documents\IDOT Office\tc16tm-ltr1-1\Projects\tc16sc023x34\CADData\CADSheets\tc16.dgn

Tue Apr 2 4 2019 10:27:35 AM User:footemj

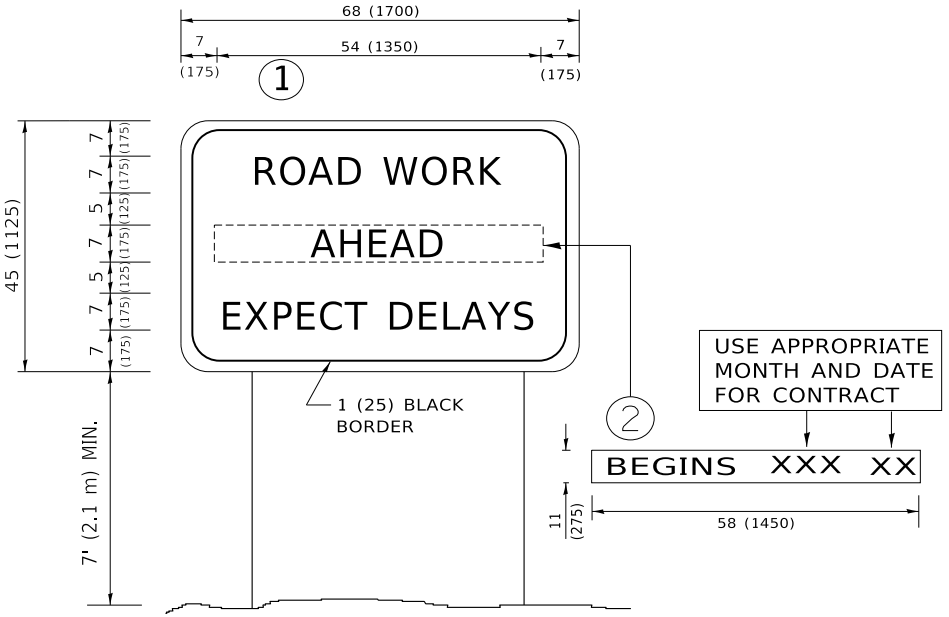

NOTES:

1. USE BLACK LETTERING ON ORANGE BACKGROUND.
2. ERECT SIGNS IN ADVANCE OF THE LOCATION FOR THE "ROAD CONSTRUCTION AHEAD" SIGN AT LOCATIONS AS DIRECTED BY THE ENGINEER.
3. ERECT SIGN (1) WITH INSTALLED PANEL (2) ONE WEEK PRIOR TO THE START OF CONSTRUCTION.
4. REMOVE PANEL (2) SOON AFTER THE START OF CONSTRUCTION.
5. SEE SPECIAL PROVISION FOR "TEMPORARY INFORMATION SIGNING" FOR ADDITIONAL INFORMATION.
6. ONE SIGN ASSEMBLY EQUALS 25.70 SQ. FT. (2.3 SQ. M.)
7. SHALL BE PAID FOR AS TEMPORARY INFORMATION SIGNING.

ALL DIMENSIONS ARE IN INCHES (MILLIMETERS) UNLESS OTHERWISE SHOWN.

USER NAME = {username}	DESIGNED -	REVISED - R. MIRS 09-15-97
	DRAWN -	REVISED - R. MIRS 12-11-97
PLOT SCALE = 50.0000 ' / In.	CHECKED -	REVISED - T. RAMMACHER 02-02-99
PLOT DATE = 3/4/2019	DATE -	REVISED - C. JUCIUS 01-31-07

STATE OF ILLINOIS
DEPARTMENT OF TRANSPORTATION

ARTERIAL ROAD INFORMATION SIGN

SCALE: NONE | SHEET 1 OF 1 SHEETS | STA. | TO STA.

F.A. RTE.	SECTION	COUNTY	TOTAL SHEETS	SHEET NO.
	TC-22	CONTRACT NO.		
	ILLINOIS FED. AID PROJECT			

MODEL: Default
FILE NAME: pw:\\IL\BE\BENTLEY.Bentley.com:DWIDOT\Documents\IDOT Org\Local Data\1 1\Projects\Districts\District 1\Projects\Districts\District 1\CADData\CADSheets\tc22.dgn

Generated by Bentley Systems, Inc. Wed Jun 3 4:29:15 2015 10:48:10 AM User:Gstand

F.A.U.	ROUTE NO.	SEC.	COUNTY
	2505	77-00176-00-BR	KANE
	FED. ROAD DIST. NO. 5	ILLINOIS	PROJECT

STATE OF ILLINOIS
DEPARTMENT OF TRANSPORTATION
DIVISION OF HIGHWAYS

PLANS FOR PROPOSED
FEDERAL AID URBAN HIGHWAY

RANDALL ROAD STRUCTURE OVER C.M. ST. P.&P., C. & N.W. AND TYLER CREEK

F.A.U. ROUTE 2505 SECTION 77-00176-00-BR

PROJECT M-5172 (4)

STATE SECTION 1976-014-B

KANE COUNTY

C-91-019-76

INDEX OF SHEETS

1.	COVER SHEET
2.	SUMMARY OF QUANTITIES, GENERAL NOTES & TYPICAL CROSS SECTION.
3.	EMBANKMENT & SLOPEWALL DETAIL
4-5.	PLAN AND PROFILE
6-8.	STATION CROSS SECTIONS - NORTH APPROACH
9-10.	STATION CROSS SECTIONS - SOUTH APPROACH
11-53.	BRIDGE PLANS
	STANDARD 2113-1
	STANDARD 2300-1

SCALES

PLAN	0 50 100	1 INCH = 50 FEET AND AS SHOWN
PROFILE HORIZ.	0 50 100	1 INCH = 50 FEET AND AS SHOWN
PROFILE VERT.	0 5 10	1 INCH = 5 FEET AND AS SHOWN
CROSS SECTIONS	0 5 10	1 INCH = 5 FEET AND AS SHOWN

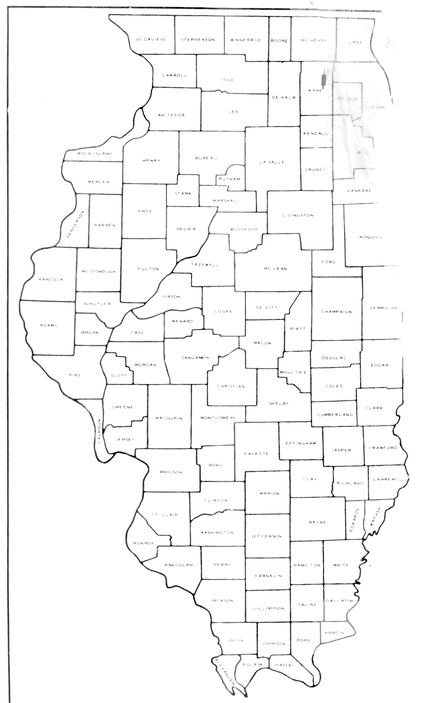

LOCATION OF SECTION INDICATED THUS: —

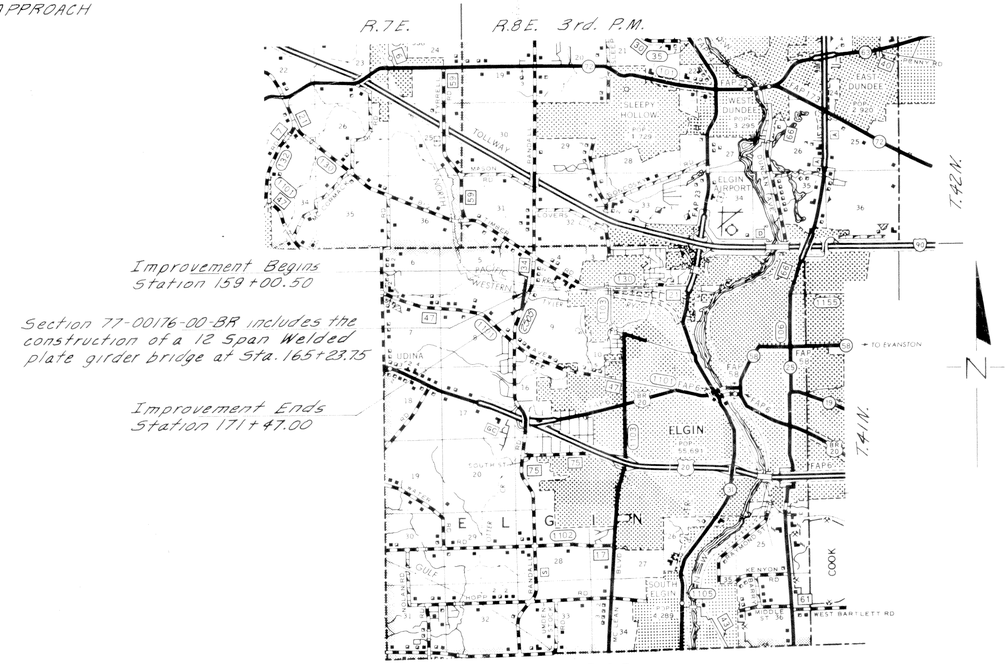

LOCATION MAP

APPROXIMATE SCALE: 1 INCH = 1 MILE

NET LENGTH OF SECTION = 1,246.50 FEET = 0.236 MILES

APPROVED _____ 19____

_____ LOCAL AGENCY REPRESENTATIVE

PASSED _____ 19____

_____ DISTRICT ENGINEER OF LOCAL ROADS & STREETS

APPROVED _____ 19____

_____ DISTRICT ENGINEER

STATE OF ILLINOIS
DEPARTMENT OF TRANSPORTATION

U.S. DEPARTMENT OF TRANSPORTATION
FEDERAL HIGHWAY ADMINISTRATION

APPROVED

_____ DIVISION ADMINISTRATOR DA

CONTRACT NO.

COLLINS AND RICE, INC. CONSULTING ENGINEERS SPRINGFIELD, ILLINOIS

Marcus P. Illinois Prof. E.

See Plan & Profile sheets 4 & 5
for Bench Mark Data

ROUTE NO.	SECTION	COUNTY	TOTAL SHEETS	SHEET NO.
F.A.U. 2505	77-00176-00-BR	KANE	53	11
FED. ROAD DIST. NO. 5	ILLINOIS	PROJECT	M-5172(4)	

Sheet 1 of 43

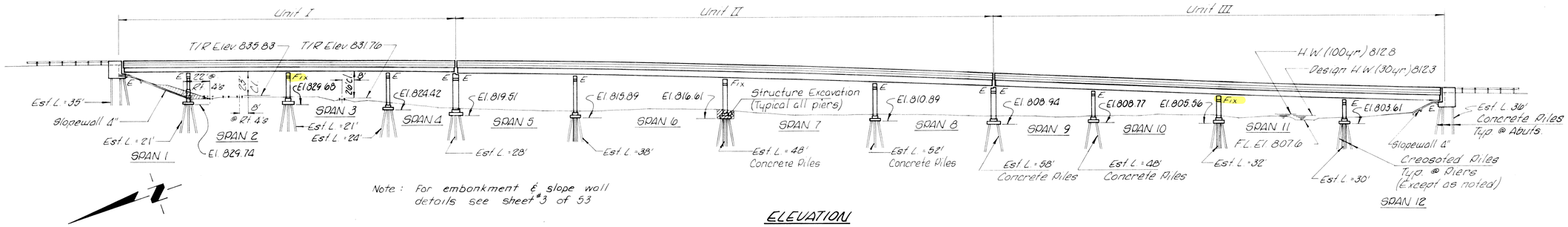

Note : For embonkment & slope wall details see sheet #3 of 53

ELEVATION

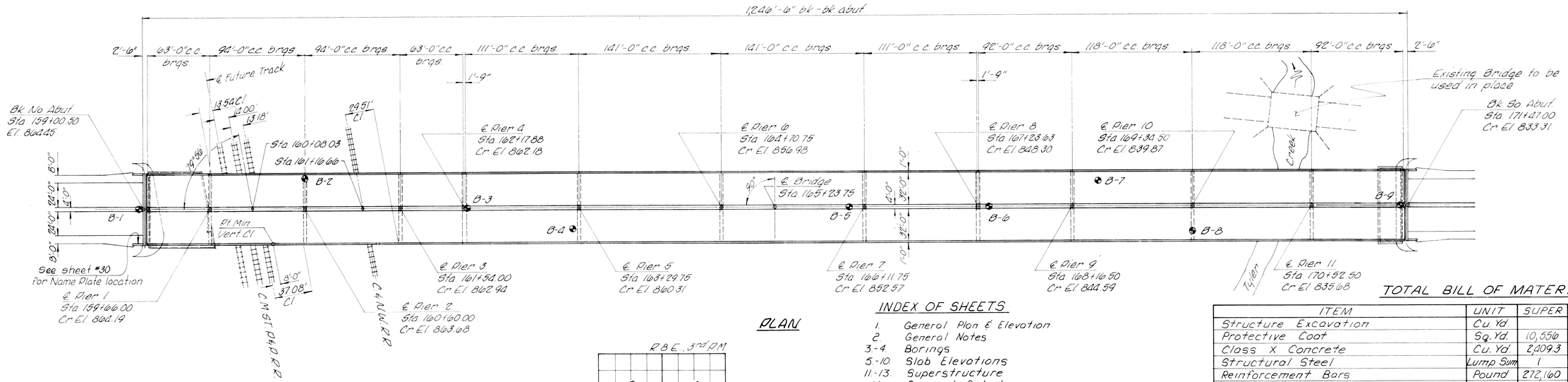

PLAN

INDEX OF SHEETS

1. General Plan & Elevation
2. General Notes
3-4. Borings
5-10. Slab Elevations
11-13. Superstructure
14. Parapet Details
15-17. Expansion Joint Details
18. Drainage & Pedestal Layout
19-20. Drainage Scuppers
21-29. Structural Steel
30-31. Abutments
32-42. Piers
43. Concrete Pile Details

HIGHWAY CLASSIFICATION

Class ____ Minor Arterial
A.D.T. ____ 5,930 (1975), 18,100 (1995)
Design Speed ____ 55 MPH

ELEVATION TOP OF HIGH RAIL

East	200'L	100'L	℄	100'R	200'R	West
	835.01	835.36	835.83	836.35	836.84	

C.M.ST.P.&P.R.R. TRACKS

TYLER CREEK WATERWAY DATA

Drainage Area ____ 32.75 Sq Mi.
Existing Opening ____ 165 Sq Ft
Req'd Opening (30yr) ____ 133 Sq Ft.
Proposed Opening ____ 250 Sq Ft
Computed Discharge (30yr) ____ 815 C.F.S.
Created Head ____ 0.0 Ft
Computed Discharge (100yr) ____ 1,120 C.F.S.
Computed Head ____ 0.0 Ft.

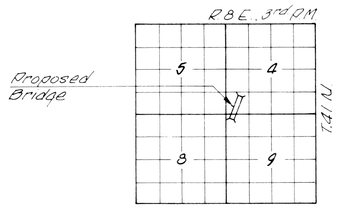

LOCATION PLAN

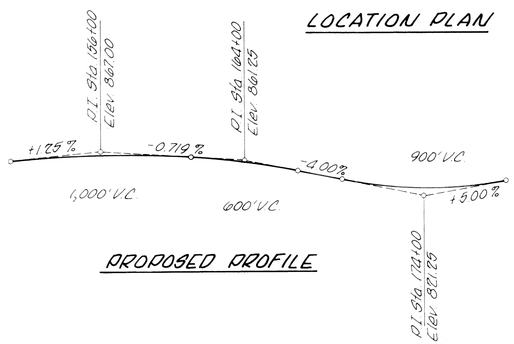

PROPOSED PROFILE

DESIGN STRESSES

f'_c = 3500 psi.
f_s = 60,000 psi. (Reinforcement)
f_y = 50,000 psi. (Struct.) (M-222)
n = 8.5

} LOAD FACTOR DESIGN

2½" included in ℄ for future wearing surface.
LOADING H-S 20-44
DESIGN SPECIFICATIONS:
AASHTO 1973 & 1974, 1975, 1976, & 1977 Interims.

Ingrid L. Stone Jr.
Illinois Structural No. 2934

TOTAL BILL OF MATERIAL

ITEM	UNIT	SUPER	SUB	TOTAL
Structure Excavation	Cu. Yd.		1442	1442
Protective Coat	Sq. Yd.	10,556		10,556
Class X Concrete	Cu. Yd.	2,409.3	1931.1	4,340.4
Structural Steel	Lump Sum	1		1
Reinforcement Bars	Pound	272,160	288,780	560,940
Reinforcement Bars (Epoxy Coated)	Pound	421,590		421,590
Creosoted Piles (20.1' to 38')	Lin. Ft.		9,472	9,472
Concrete Piles	Lin. Ft.		7,520	7,520
Test Pile Timber	Each		7	7
Test Pile Concrete	Each		6	6
Name Plates	Each	1		1
Drainage Scuppers	Each	10		10
Neoprene Expansion Joint 2"	Lin. Ft.	71		71
Neoprene Expansion Joint 4"	Lin. Ft.	71		71
Neoprene Expansion Joint 6½"	Lin. Ft.	142		142
Stud Shear Connectors	Each	14,202		14,202

RANDALL ROAD

GENERAL PLAN & ELEVATION

PROJECT M-5172(4)
F.A.U. RTE. 2505 SEC. 77-00176-00-BR
KANE COUNTY
STA. 165+23.75

COLLINS AND RICE
CONSULTING ENGINEERS

DESIGNED F.S. CHECKED R.M.B.
DRAWN D.S. DATE 3-1-78 NO. 98C

ROUTE NO.	SECTION	COUNTY	TOTAL SHEETS	SHEET NO.
FAU 2505	77-00170-00-BR	KANE	53	40
FED. ROAD DIST. NO. 5	ILLINOIS	PROJECT M-5172(4)		

Sheet 30 of 43

End Post shall be poured after bridge parapet is in place. Form top surface to match parapet grade.

Locate Name Plate on Rdwy. face of West wing.

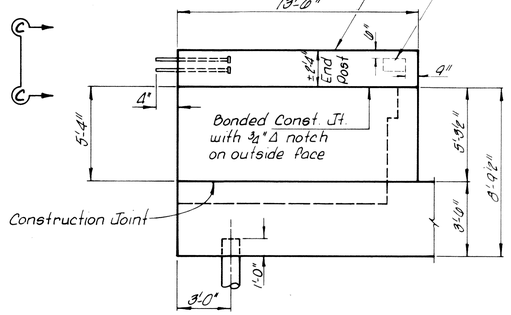

WING WALL ELEVATION

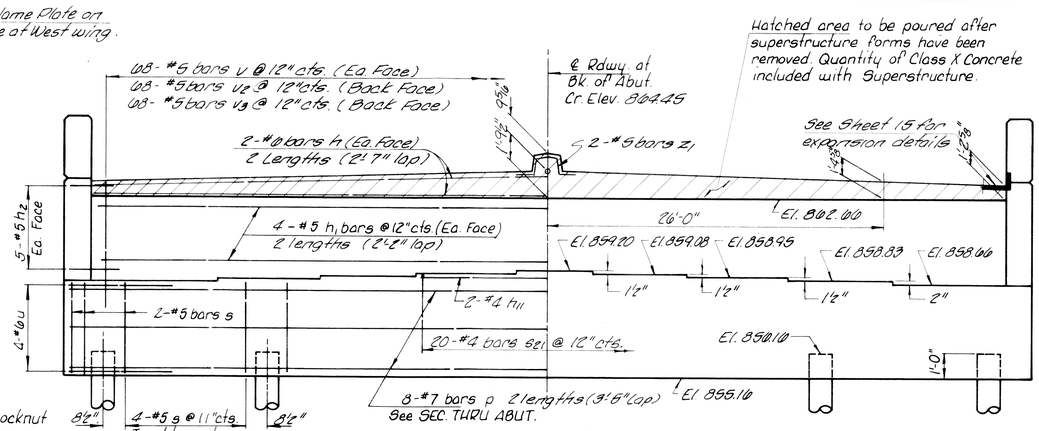

ELEVATION

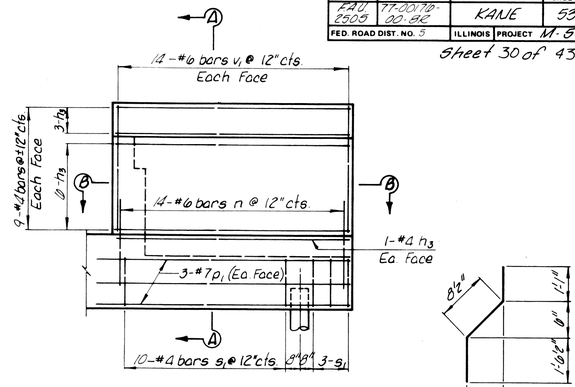

WINGWALL ELEVATION

Showing Reinforcement

BAR v2

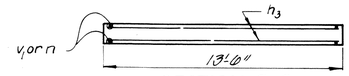

SECTION B-B

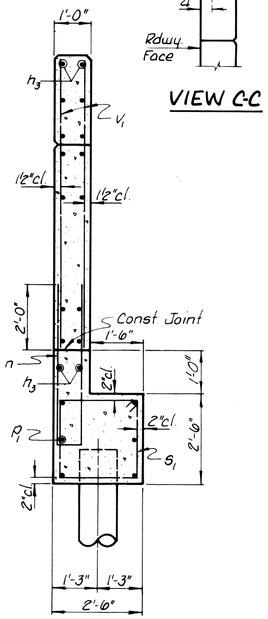

SECTION A-A

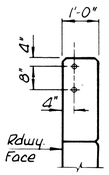

VIEW C-C

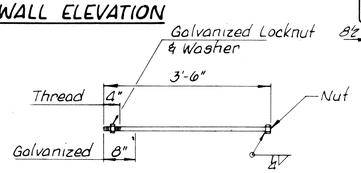

1" ϕ ANCHOR BOLT

Cost to be incidental to bridge structure

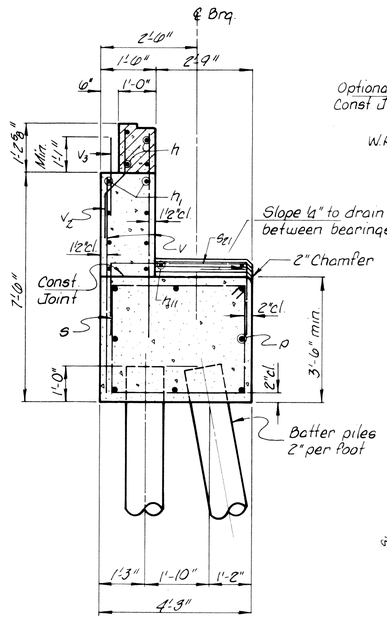

SECTION THRU ABUTMENT

PILE DATA

Type	Concrete
No. Req'd	19*
Capacity	35 Tons/Pile
Estimated length	35 Feet/Pile

* Includes one test pile to be driven in a permanent location at the North Abutment.

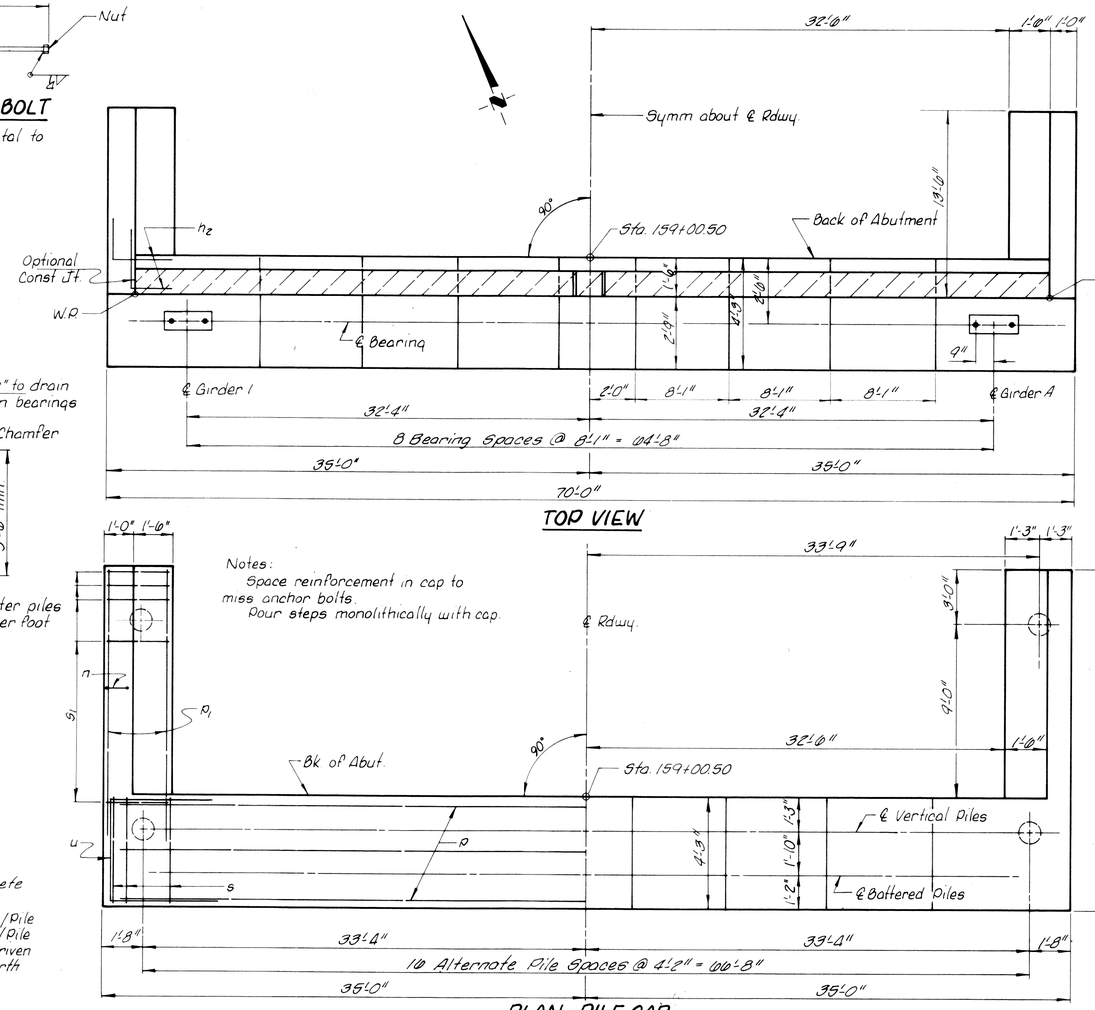

TOP VIEW

PLAN - PILE CAP

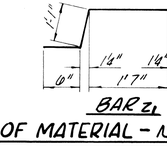

BAR z1

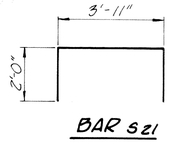

BAR sz1

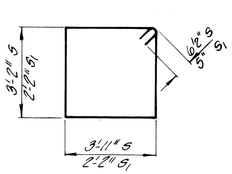

BAR s & s1

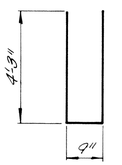

BAR n

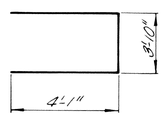

BAR u

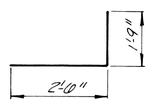

BAR h2

BILL OF MATERIAL - N. ABUT.

BAR	NO.	SIZE	LENGTH	SHAPE
n	8	#6	35'-2"	
h1	116	#5	35'-0"	
h2	20	#5	4'-3"	
h3	40	#4	13'-3"	
h11	2	#4	19'-10"	
n	28	#6	4'-3"	
p	116	#7	35'-7"	
p1	12	#7	14'-0"	
s	68	#5	15'-3"	
s1	24	#4	9'-0"	
sz1	20	#4	7'-11"	
u	8	#6	12'-0"	
z1	2	#5	4'-9"	
v	130	#5	7'-2"	
v1	50	#6	7'-6"	
v2	108	#5	3'-4"	
v3	108	#5	2'-2"	

Class X Concrete	Cu. Yd.	68.3*
Reinforcement Bars	Pound	6,920
Concrete Piles	Lin. Ft.	630
Test Piles Concrete	Each	1
Name Plates	Each	1

NORTH ABUTMENT

F.A.U. RTE. 2505 SEC. 77-00170-00-BR
KANE COUNTY
STA. 1651+23.75

COLLINS AND RICE
CONSULTING ENGINEERS

DESIGNED F.S. CHECKED R.M.B.
DRAWN G.M.G. DATE 3-1-78 NO. 980

ROUTE NO.	SECTION	COUNTY	TOTAL SHEETS	SHEET NO.
FAU 2505	77-00176 -00-BR	KANE	53	41
FED. ROAD DIST. NO. 3		ILLINOIS PROJECT	M-5172 (4)	

Sheet 31 of 43

End Post shall be poured after bridge parapet is in place. Form top surface to match parapet grade.

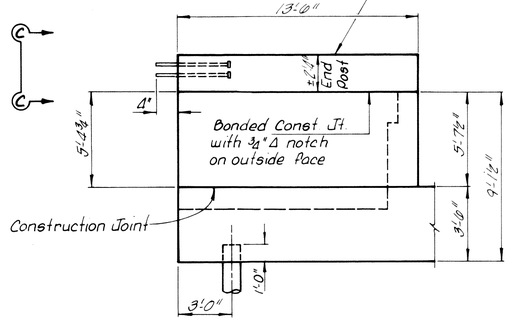

WING WALL ELEVATION

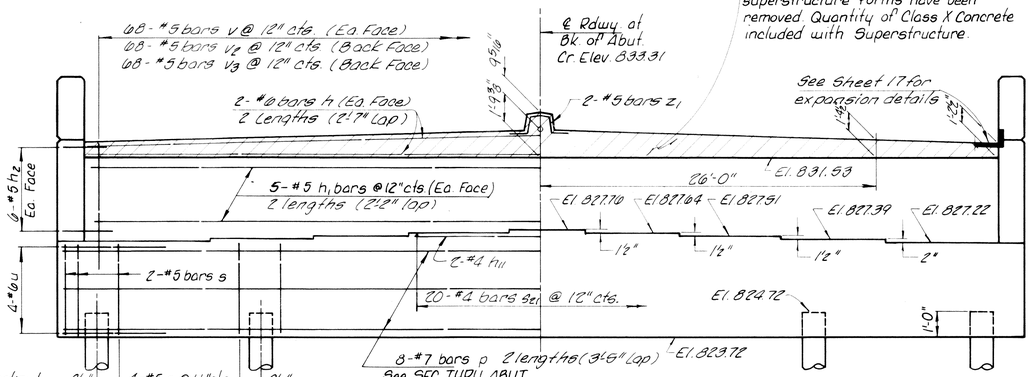

ELEVATION

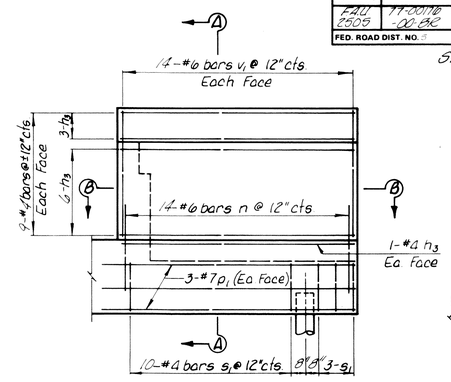

WINGWALL ELEVATION

Showing Reinforcement

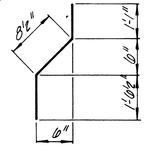

BAR v2

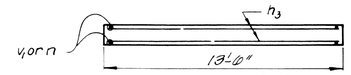

SECTION B-B

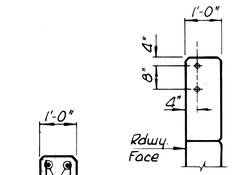

VIEW C-C

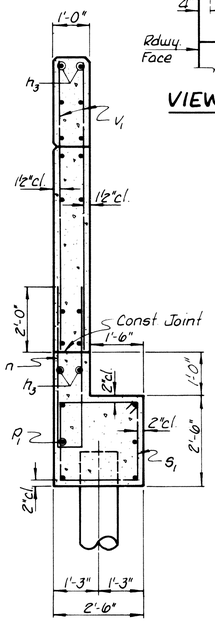

SECTION A-A

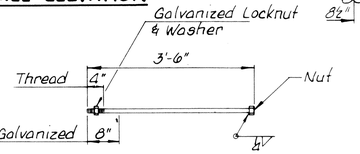

1" ℄ ANCHOR BOLT

Cost to be incidental to bridge structure

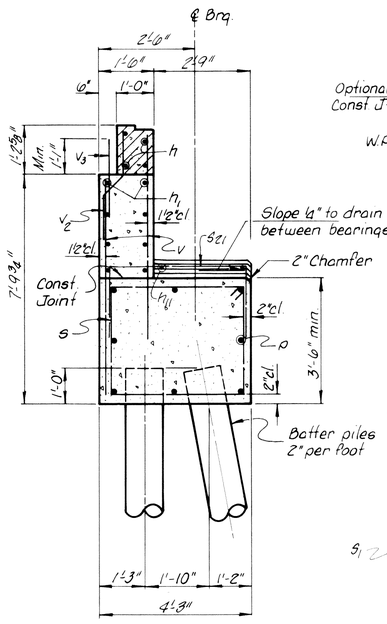

SECTION THRU ABUTMENT

PILE DATA

Type _____ Concrete
No. Req'd _____ 19*
Capacity _____ 41 Tons/Pile
Estimated length _____ 30 Feet/Pile
* Includes one test pile to be driven in a permanent location at the South Abutment.

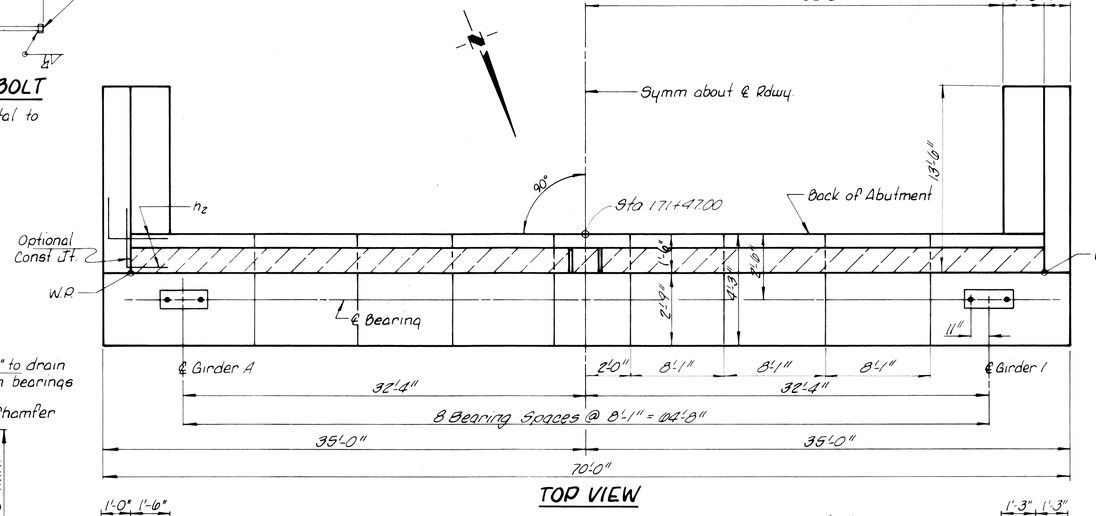

TOP VIEW

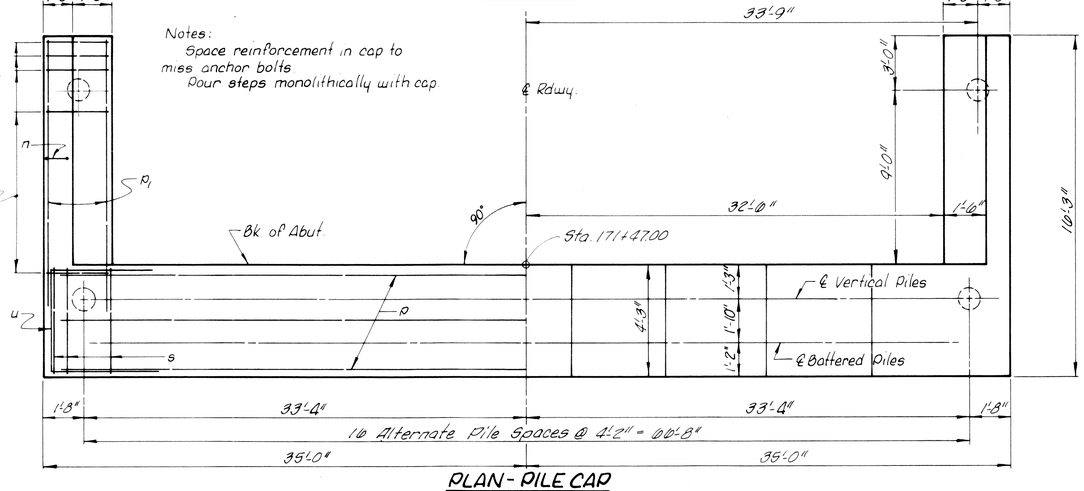

PLAN - PILE CAP

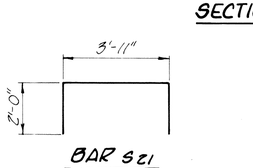

BAR Sz1

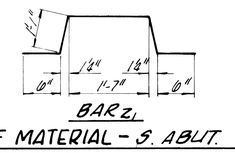

BAR z1

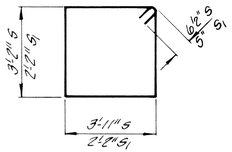

BAR s & s1

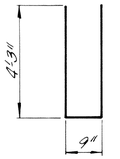

BAR n

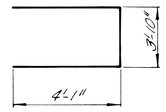

BAR u

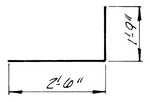

BAR h2

BILL OF MATERIAL - S. ABUT.

BAR	NO.	SIZE	LENGTH	SHAPE
n	8	#6	35'-2"	
h1	20	#5	35'-0"	
h2	24	#5	4'-3"	
h3	40	#4	13'-3"	
h11	2	#4	19'-10"	
n	28	#6	9'-3"	
p	16	#7	35'-7"	
p1	12	#7	14'-0"	
s	68	#5	15'-3"	
s1	26	#4	9'-6"	
sz1	20	#4	7'-11"	
u	8	#6	12'-0"	
z1	2	#5	4'-9"	
v	130	#5	7'-2"	
v1	56	#6	7'-0"	
v2	68	#5	3'-4"	
v3	68	#5	2'-2"	

Class X Concrete	Cu. Yd.	69.5
Reinforcement Bars	Pound	7,080
Concrete Piles	Lin. Ft.	648
Test Piles Concrete	Each	1

SOUTH ABUTMENT

FAU. RTE. 2505 SEC. 77-00176-00-BR
KANE COUNTY
STA. 165+23.75

COLLINS AND RICE
CONSULTING ENGINEERS

DESIGNED F.S. CHECKED R.M.B.
DRAWN G.M.G. DATE 3-1-78 NO. 980

F.A.P. RTE.	SECTION	COUNTY	TOTAL SHEETS	SHEET NO.
336	13-00176-02-BR	KANE	53	1

FOR INDEX OF SHEETS, SEE SHEET NO. 2

FOR LIST OF HIGHWAY STANDARDS, SEE SHEET NO. 2

TRAFFIC DATA

DESIGN DESIGNATIONS:
RANDALL ROAD = OTHER PRINCIPAL ARTERIAL

ADT = 46.800 (2010)

DESIGN SPEED = 50 MPH

POSTED SPEED = 50 MPH

KANE COUNTY
DIVISION OF TRANSPORTATION
STATE OF ILLINOIS

PLANS FOR PROPOSED NON–MFT PROJECT

HANSON BRIDGE (S.N. 045–3115)
FAP ROUTE 336 / RANDALL ROAD
OVER TYLER CREEK, UPRR, METRA, AND CPRR
SECTION 13–00176–02–BR

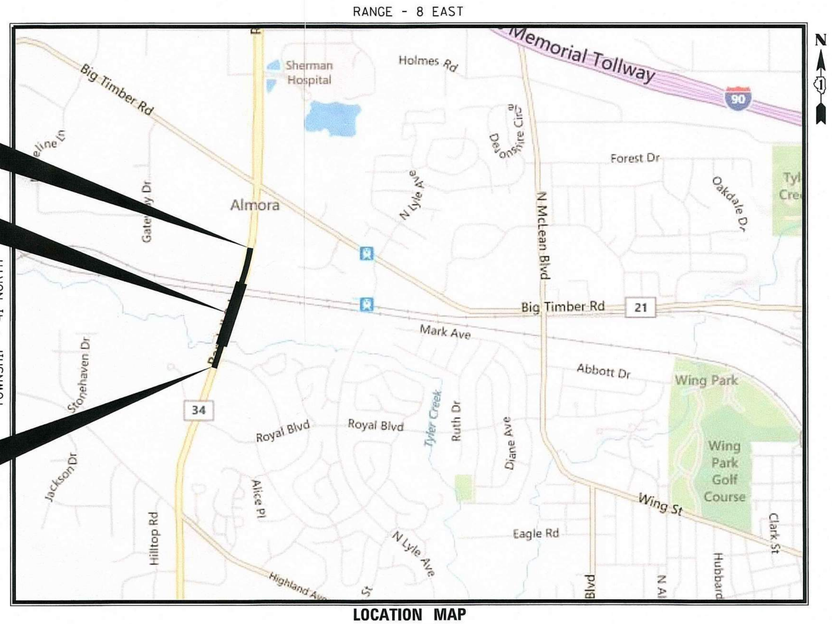

LOCATION MAP
(NOT TO SCALE)

PROJECT GROSS AND NET LENGTHS:
RANDALL ROAD = 2,313 FEET (0.44 MILES)

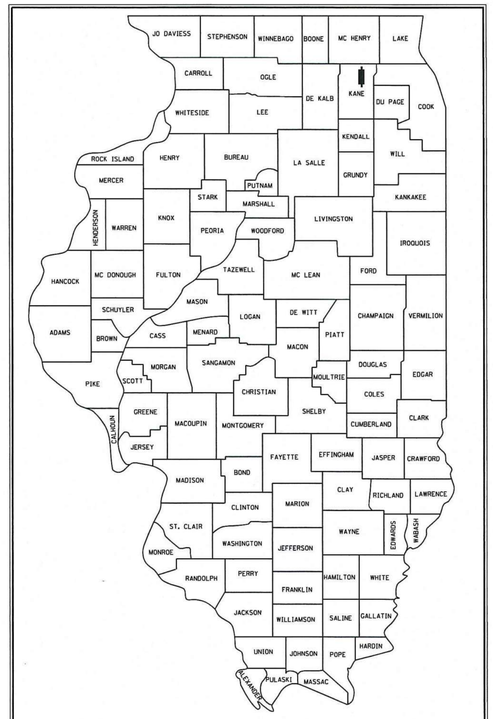

LOCATION OF SECTION INDICATED THUS: –

KANE COUNTY
DIVISION OF TRANSPORTATION

APPROVED MARCH 7 20 14

KANE COUNTY ENGINEER

STRUCTURAL ENGINEER'S SIGN & SEAL

ROBERT G. DAVIES, S.E., P.E.
EXPIRES: 11-30-2014
PERTAINS TO SHEETS: 18-31

STATE OF ILLINOIS · ROBERT G. DAVIES · 081-004666 · McHENRY, IL · LICENSED STRUCTURAL ENGINEER

MATTHEW J. FELLER, P.E., PTOE
NO. 062-065169
EXPIRES: 11/30/2015
PERTAINS TO SHEETS: 1-17

LICENSED PROFESSIONAL ENGINEER · MATTHEW J. FELLER · 062-065169 · STATE OF ILLINOIS

0 100′ 200′ — 1″ = 100′
0 50′ 100′ — 1″ = 50′
0 50′ 100′ — 1″ = 20′

FULL SIZE PLANS HAVE BEEN PREPARED USING STANDARD ENGINEERING SCALES, REDUCED SIZED PLANS WILL NOT CONFORM TO STANDARD SCALES. IN MAKING MEASUREMENTS ON REDUCED PLANS, THE ABOVE SCALES MAY BE USED

J.U.L.I.E.
JOINT UTILITY LOCATING INFORMATION FOR EXCAVATION
1–800–892–0123 OR 811

HRGreen
HRGreen.com
Illinois Professional Design Firm
184-001322

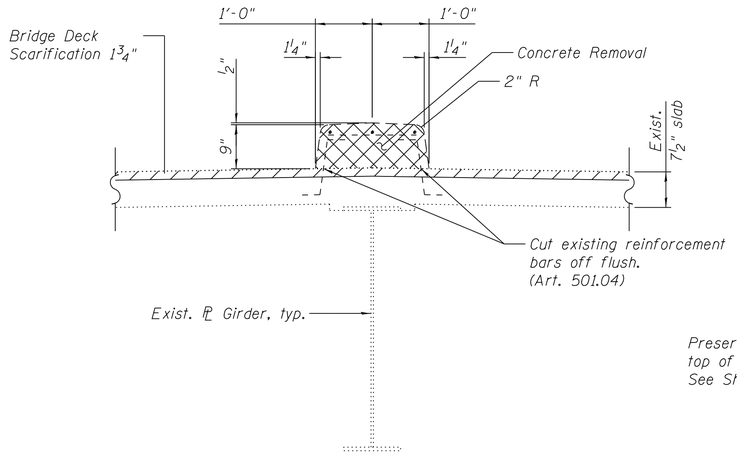

EXISTING MEDIAN SECTION

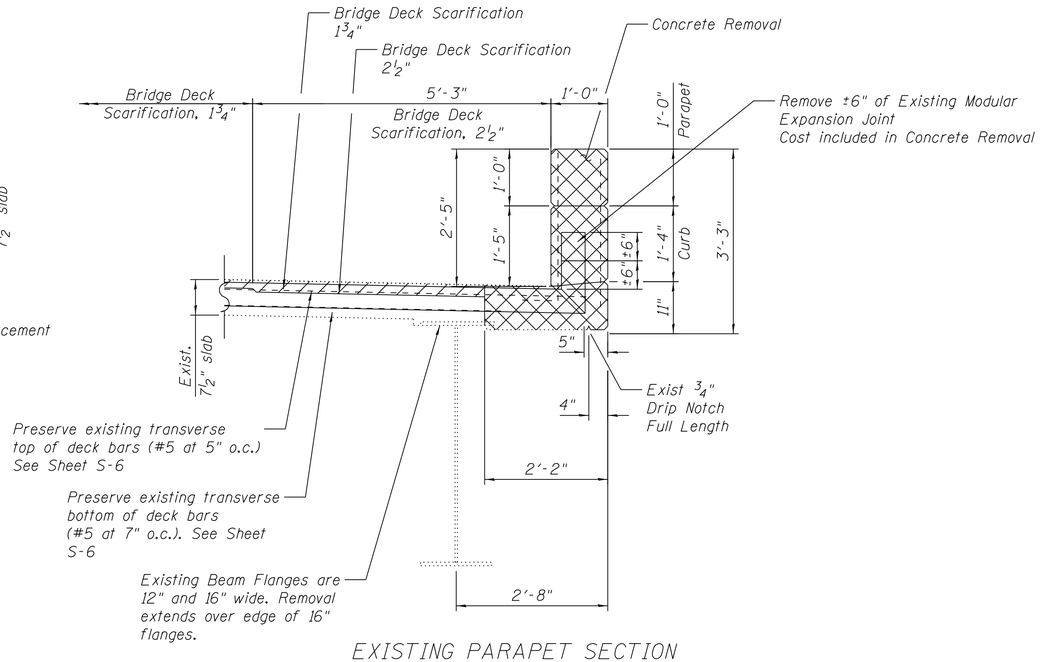

EXISTING PARAPET SECTION

Shown at Modular Expansion Joint

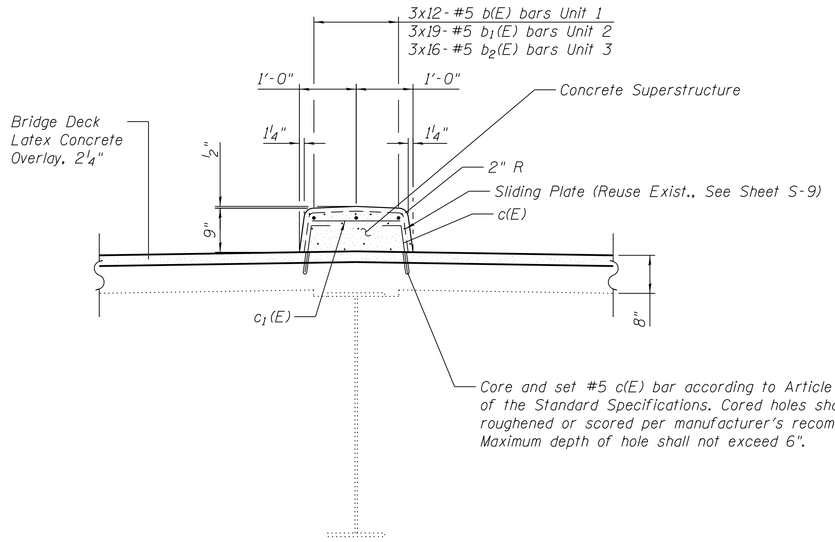

PROPOSED MEDIAN SECTION ON BRIDGE

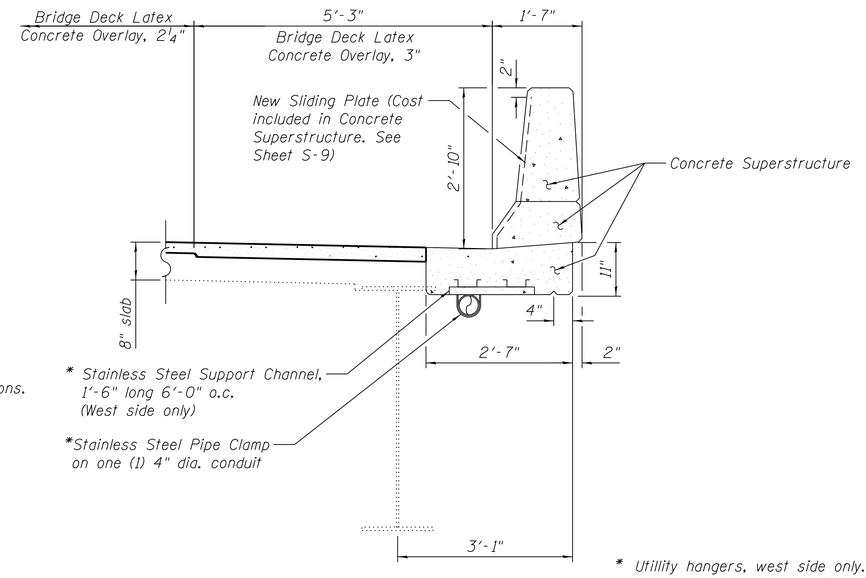

PROPOSED PARAPET SECTION

Shown at Modular Expansion Joint
See Sheet S-5 and S-7
for additional information

* Utillity hangers, west side only. Supply in accordance with Special Provisions "Utility Hanger." Clamp and hardware included under Conduit. Channels included under Concrete Superstructure. 208 Channel and Clamp Assemblies required.

COMPANY NAME:
PROJECT CONTACT: Kevin Arft
CLIENT: Kane County Division of Transportation
DATE PLOTTED: 3/12/2014 9:12:06 AM
FILE NAME: 210_Deck Details-02.dgn
PLOT DRIVER: pdf_DET-TTF.plt
PEN TABLE: standard-trans.tbl

HRGreen
HRGreen.com
Illinois Professional Design Firm # 184-001322

USER NAME = whood	DESIGNED - KMA	REVISED -
	CHECKED - RGD	REVISED -
PLOT SCALE =	DRAWN - WJH	REVISED -
PLOT DATE = 3/12/2014	CHECKED - RGD	REVISED -

KANE COUNTY
DIVISION OF TRANSPORTATION

DECK DETAILS
STRUCTURE NO. 045-3115
SHEET NO. S-4 OF S-13 SHEETS

F.A. RTE.	SECTION	COUNTY	TOTAL SHEETS	SHEET NO.
336	13-00176-02-BR	KANE	53	21
		CONTRACT NO.		
	ILLINOIS	FED. AID PROJECT		

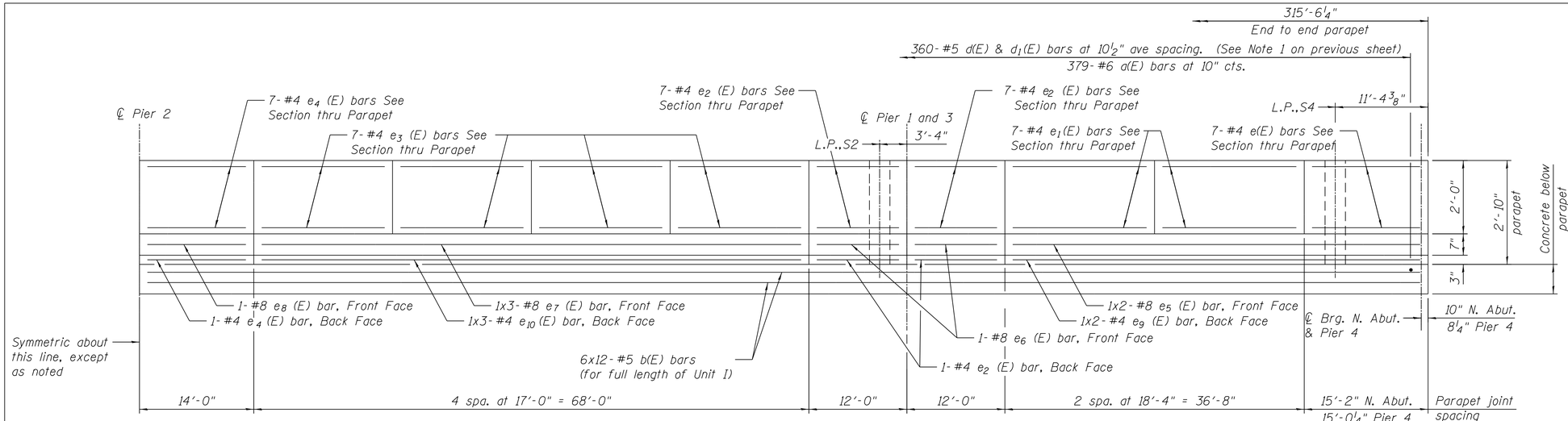

SUPERSTRUCTURE BILL OF MATERIAL

Bar	No.	Size	Length	Shape
a (E)	2,984	#6	6'- 6"	
a1 (E)	50	#6	8'- 9"	
b (E)	180	#5	28'- 7"	
b1 (E)	285	#5	29'- 0"	
b2 (E)	240	#5	28'- 8"	
b3 (E)	24	#5	13'- 2"	
c (E)	2,494	#5	1'- 3"	
c1 (E)	1,247	#5	1'- 8"	
d (E)	2,840	#5	5'- 7"	
d1 (E)	2,840	#5	7'- 11"	
d3 (E)	60	#5	8'- 4"	
d4 (E)	70	#6	10'- 9"	
d5 (E)	30	#6	5'- 7"	
e (E)	28	#4	14'- 8"	
e1 (E)	196	#4	18'- 0"	
e2 (E)	64	#4	11'- 8"	
e3 (E)	224	#4	16'- 8"	
e4 (E)	32	#4	13'- 8"	
e5 (E)	8	#8	28'- 4"	
e6 (E)	8	#8	11'- 8"	
e7 (E)	12	#8	26'- 0"	
e8 (E)	4	#8	13'- 8"	
e9 (E)	8	#4	26'- 9"	
e10 (E)	12	#4	23'- 11"	
e11 (E)	96	#4	19'- 8"	
e12 (E)	168	#4	16'- 6"	
e13 (E)	16	#8	26'- 9"	
e14 (E)	12	#8	19'- 8"	
e15 (E)	16	#8	29'- 1"	
e16 (E)	16	#4	24'- 4"	
e17 (E)	28	#4	26'- 8"	
e18 (E)	28	#4	19'- 4"	
e19 (E)	84	#4	18'- 6"	
e20 (E)	64	#4	16'- 2"	
e21 (E)	28	#4	15'- 2"	
e22 (E)	32	#4	17'- 8"	
e23 (E)	12	#8	28'- 9"	
e24 (E)	8	#8	16'- 2"	
e25 (E)	16	#8	24'- 8"	
e26 (E)	4	#8	17'- 8"	
e27 (E)	12	#4	29'- 1"	
e28 (E)	32	#4	13'- 2"	
e29 (E)	4	#8	13'- 2"	
Concrete Removal		Cu. Yd.	431.8	
Concrete Superstructure		Cu. Yd.	555.7	
Reinforcement Bars, Epoxy Coated		Pound	119,490	
Bridge Deck Grooving		Sq. Yd.	8,587	
Protective Coat		Sq. Yd.	10,687	
Mechanical Splicers		Each	2,840	

Bars indicated thus 1 x 2-#8 etc. indicates 1 line of bars with 2 lengths per line.

LEGEND

L.P. = Light Pole Location (at both sides)
Sx = Span #

MINIMUM BAR LAP

(Parapet)

#4 bar = 2'-0"
#5 bar = 2'-6"
#8 bar = 5'-2"

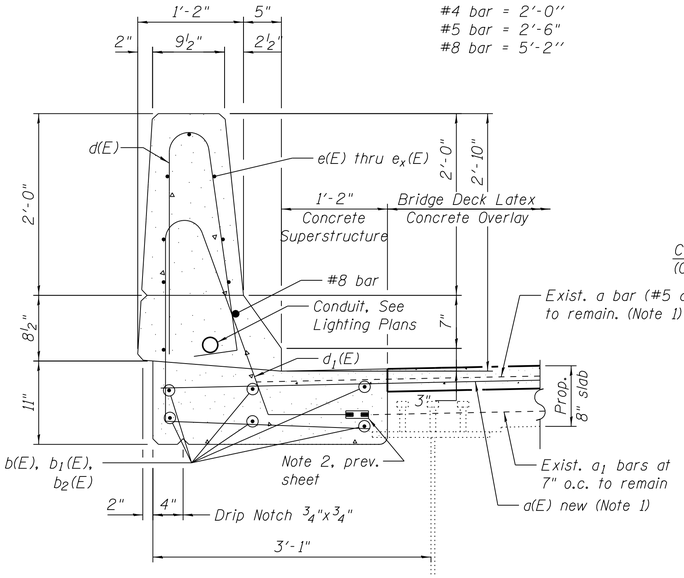

SECTION THRU PARAPET

INSIDE ELEVATION OF PARAPET - UNIT I

Reinforcement in additional concrete below parapet also shown

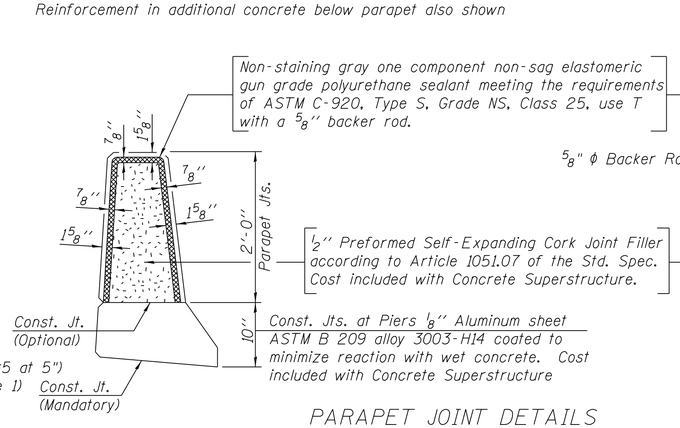

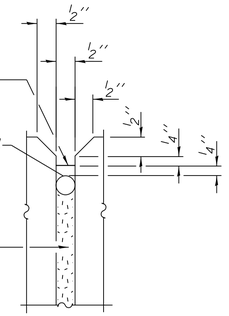

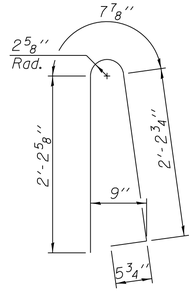

BAR d(E)

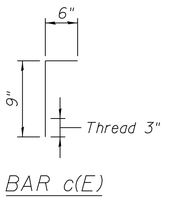

BAR c(E)

PARAPET JOINT DETAILS

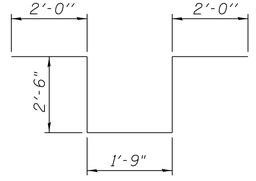

BAR d4(E)

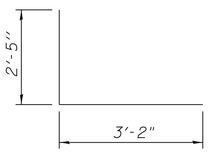

BAR d5(E)

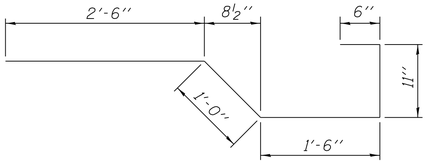

BAR x(E)

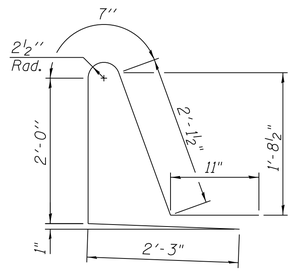

BAR d1(E)

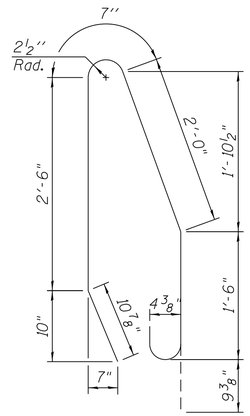

BAR d3(E)

Notes:

1. Existing transverse reinforcement shall be cleaned and incorporated into the new construction. Cost included with Concrete Removal. Clean bars as directed in Art. 501.05. Repair epoxy coated bars as noted in Art. 501.05. Uncoated bars shall be painted in conformance with Special Provision for Cleaning and Painting Exposed Rebar.
2. Coordinate Light Pole foundation locations with Lighting Plans.
3. Work this Sheet with Sheets S-1 through S-7 and S-9.
4. See S-4 for Support Channel detail.

COMPANY NAME:
PROJECT CONTACT: Kevin Arft
CLIENT: Kane County Division of Transportation
DATE PLOTTED: 3/12/2014 9:12:11 AM
FILE NAME: 210-Parapet02.dgn
PLOT DRIVER: pdf_DET-11ff.plt
PEN TABLE: standard-trans.tbl

HRGreen.com
Illinois Professional Design Firm # 184-001322

USER NAME = whood	DESIGNED - KMA	REVISED -
	CHECKED - RGD	REVISED -
PLOT SCALE =	DRAWN - WJH	REVISED -
PLOT DATE = 3/12/2014	CHECKED - RGD	REVISED -

KANE COUNTY
DIVISION OF TRANSPORTATION

SUPERSTRUCTURE DETAILS
STRUCTURE NO. 045-3115
SHEET NO. S-6 OF S-13 SHEETS

F.A. RTE.	SECTION	COUNTY	TOTAL SHEETS	SHEET NO.
336	13-00176-02-BR	KANE	53	23
		CONTRACT NO.		
		ILLINOIS FED. AID PROJECT		

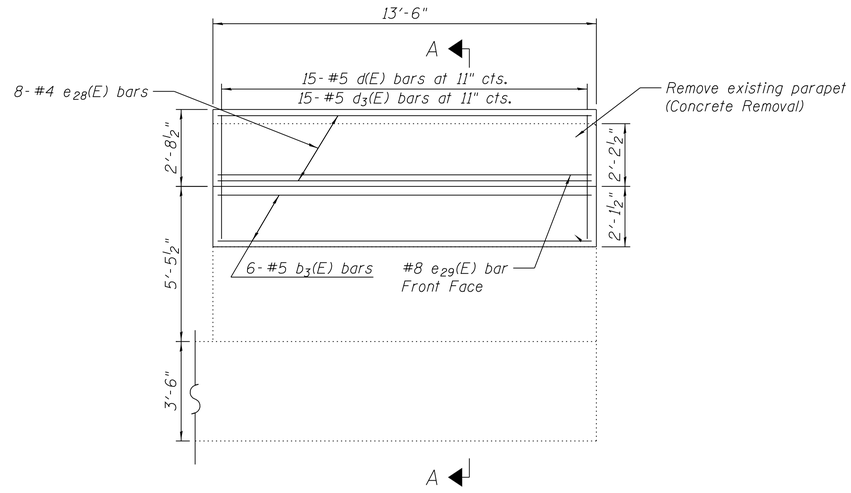

TYPICAL EXTERIOR WINGWALL ELEVATION

Looking at back face
4 locations

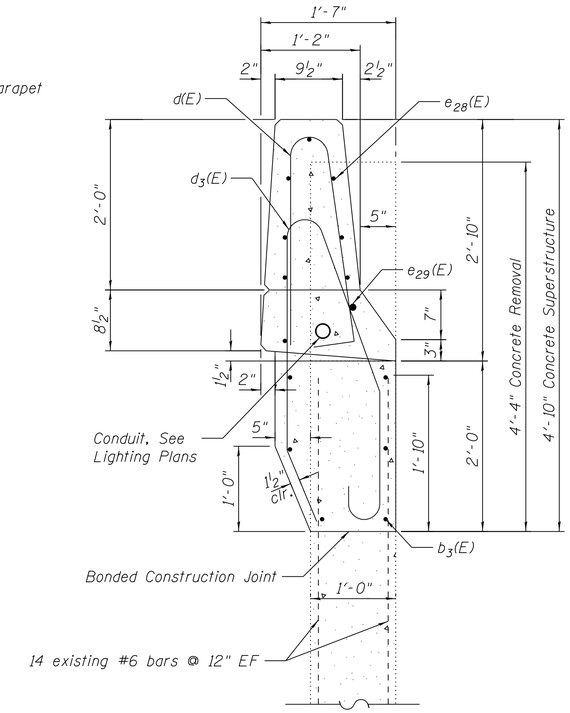

SECTION A-A

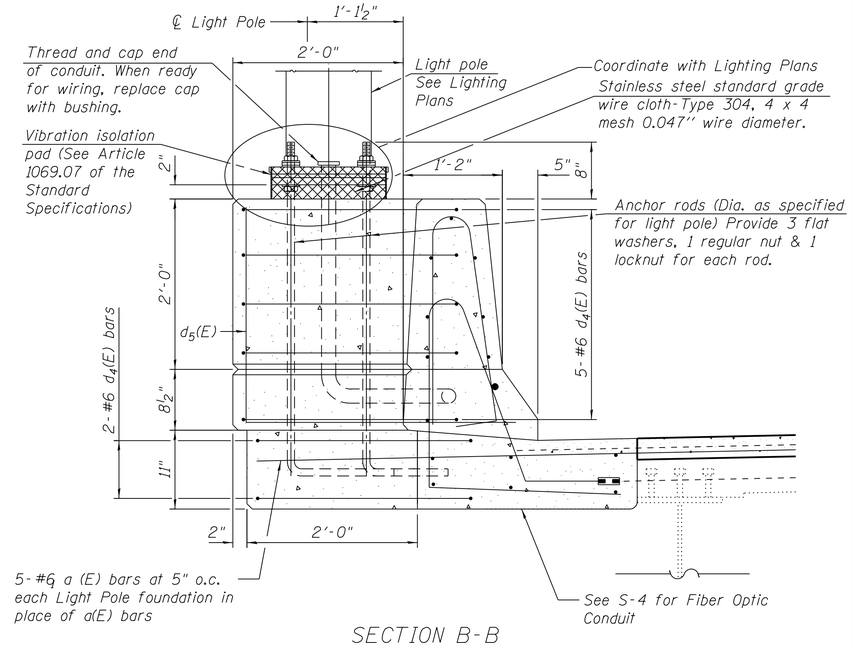

SECTION B-B

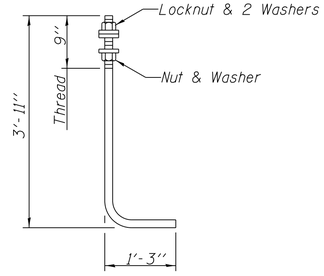

ANCHOR ROD

Diameter as specified for light poles.
See Lighting Plans. (ASTM F 1554 Grade 105)

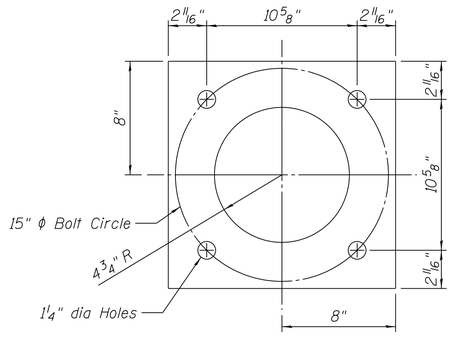

LEVELING PLATE DETAIL

Notes:

1. Level light pole plates, using the flange nuts prior to pouring the parapet wall. The top of the plate shall be at the same elevation as the finished concrete parapet.

2. The cost of Anchor Bolts, Conduit, Leveling Plate and Foundation is included in the cost of Concrete Superstructure.

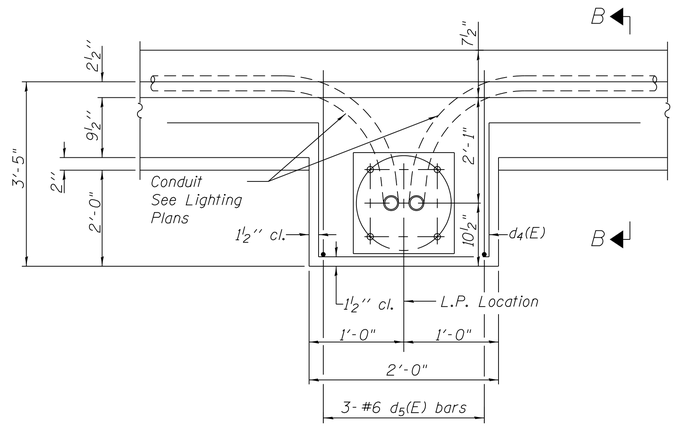

PLAN

Proposed Light Pole Foundation on bridge
10 Location

Note:
Cost of anchor rods are included with Concrete Superstructure.

Notes:

Existing transverse reinforcement shall be cleaned and incorporated into the new construction. Cost included with Concrete Removal. Clean bars as directed in Art. 501.05. Repair epoxy coated bars as directed in Art. 501.05. Uncoated bars shall be painted in conformance with Special Provisions for Cleaning and Painting Exposed Rebar.

See Special Provision Deck Slab Repair for additional instructions regarding existing reinforcement bars.

COMPANY NAME: Kevin Arft
PROJECT CONTACT: Kane County Division of Transportation
CLIENT:
DATE PLOTTED: 3/12/2014 9:23:14 AM
FILE NAME: 210_Parapet-Wingwall.dgn
PLOT DRIVER: pdf_DET-TTF.pltt
PEN TABLE: standard-trans.tbl

HRGreen.com
Illinois Professional Design Firm
184-001322
HRGreen

USER NAME = whood	DESIGNED - KMA	REVISED -	
	CHECKED - RGD	REVISED -	
PLOT SCALE =	DRAWN - TAY	REVISED -	
PLOT DATE = 3/12/2014	CHECKED - RGD	REVISED -	

KANE COUNTY
DIVISION OF TRANSPORTATION

SUPERSTRUCTURE DETAILS
STRUCTURE NO. 045-3115
SHEET NO. S-7 OF S-13 SHEETS

F.A. RTE.	SECTION	COUNTY	TOTAL SHEETS	SHEET NO.
336	13-00176-02-BR	KANE	53	24
		CONTRACT NO.		
		ILLINOIS FED. AID PROJECT		

F.A.P. RTE.	SECTION	COUNTY	TOTAL SHEETS	SHEET NO.
336	23-00176-05-BR	KANE	7	1

INDEX OF SHEETS

1. COVER SHEET
2. GENERAL NOTES, HIGHWAY STANDARDS, AND BILL OF MATERIALS
3. TRAFFIC STAGING PLANS – STAGE 1
4. TRAFFIC STAGING PLANS – STAGE 1
5. TRAFFIC STAGING PLANS – STAGE 2
6. TRAFFIC STAGING PLANS – STAGE 2
7. JOINT REPAIR DETAILS

FOR LIST OF HIGHWAY STANDARDS, SEE SHEET NO. 2

TRAFFIC DATA

DESIGN DESIGNATIONS:
RANDALL ROAD = OTHER PRINCIPAL ARTERIAL

ADT = 45.500 (2023)

DESIGN SPEED = 50 MPH

POSTED SPEED = 50 MPH

KANE COUNTY
DIVISION OF TRANSPORTATION
STATE OF ILLINOIS

PLANS FOR PROPOSED BRIDGE REPAIR

HANSON BRIDGE (S.N. 045–3115)
FAP ROUTE 336 / RANDALL ROAD
OVER TYLER CREEK, UPRR, CPKC, AND IC&E RR
SECTION 23–00176–05–BR

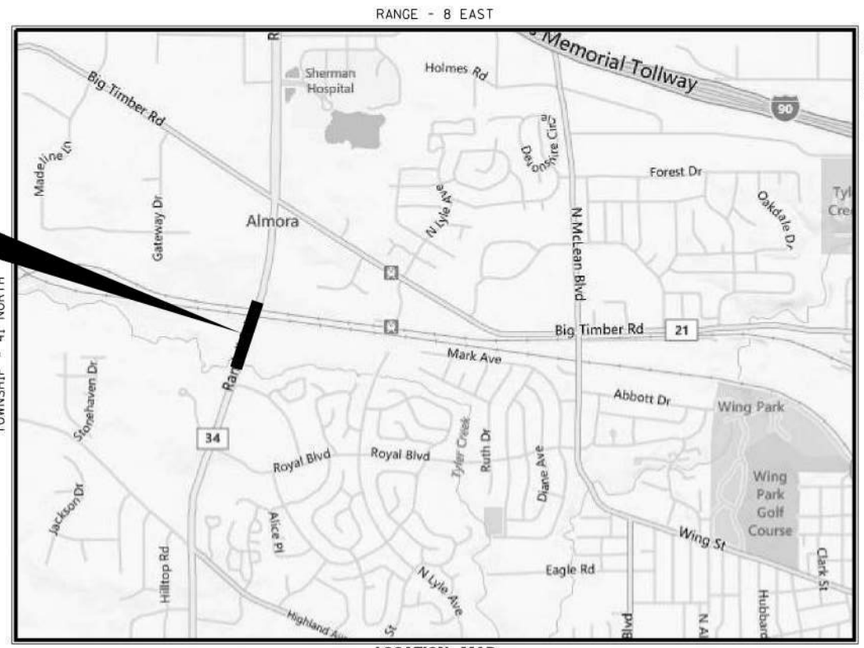

LOCATION MAP
(NOT TO SCALE)



LOCATION OF SECTION INDICATED THUS: –

KANE COUNTY
DIVISION OF TRANSPORTATION

APPROVED _____ 20 _____

_____
KANE COUNTY ENGINEER

STRUCTURAL ENGINEER'S SIGN & SEAL

Andy Underwager

ANDREW E. UNDERWAGER, S.E.
EXPIRES: 11-30-2026

STATE OF ILLINOIS
ANDREW E. UNDERWAGER
081-006218
CHICAGO, IL
LICENSED STRUCTURAL ENGINEER

0 100′ 200′ — 1″ = 100′
0 50′ 100′ — 1″ = 50′
0 50′ 100′ — 1″ = 20′

FULL SIZE PLANS HAVE BEEN PREPARED USING STANDARD ENGINEERING SCALES, REDUCED SIZED PLANS WILL NOT CONFORM TO STANDARD SCALES. IN MAKING MEASUREMENTS ON REDUCED PLANS, THE ABOVE SCALES MAY BE USED

J.U.L.I.E.
JOINT UTILITY LOCATING INFORMATION FOR EXCAVATION
1–800–892–0123 OR 811

HRGreen
HRGreen.com
Illinois Professional Design Firm
184-001322

HOT–MIX ASPHALT MIXTURE REQUIREMENTS

MIXTURE TYPE	AIR VOIDS
HOT-MIX ASPHALT SC, MIX D IL-9.5, N70; 2″	4.0% @ 70 GYR.

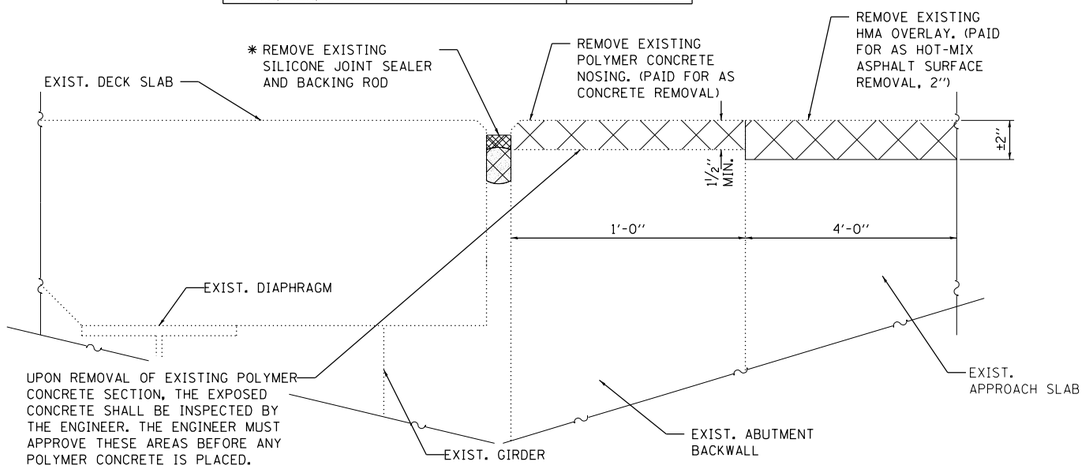

SECTION A–A THRU ABUT
EXP. JOINT REMOVAL

✱REMOVAL OF THE EXISTING SILICONE JOINT SEALER IS INCLUDED IN THE COST OF CONCRETE REMOVAL.

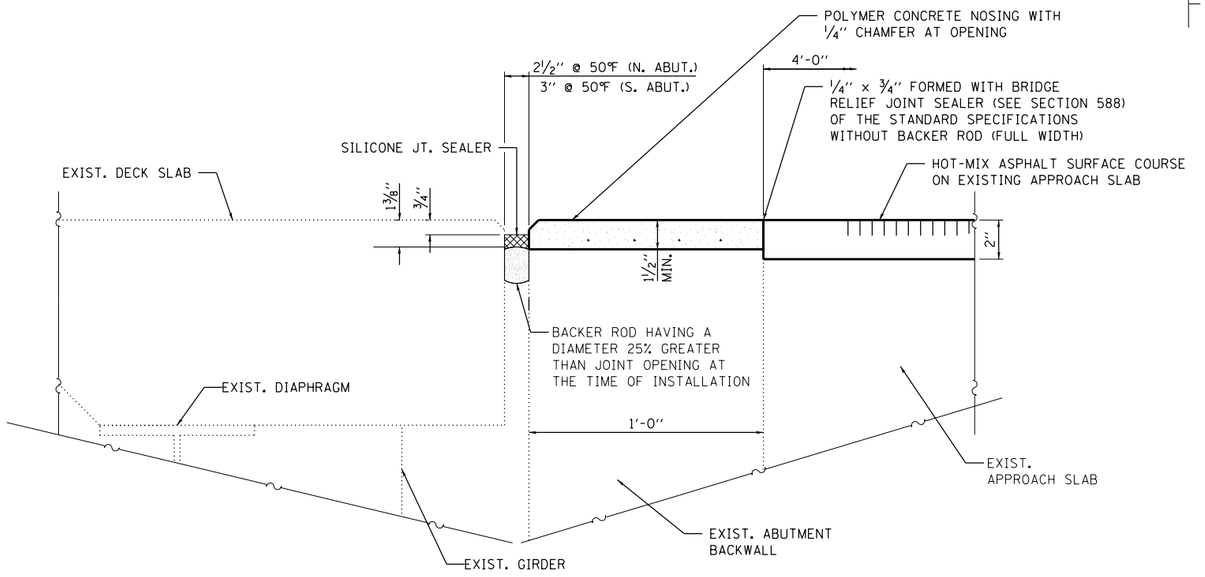

SECTION A–A THRU ABUT
EXP. JOINT REPLACEMENT

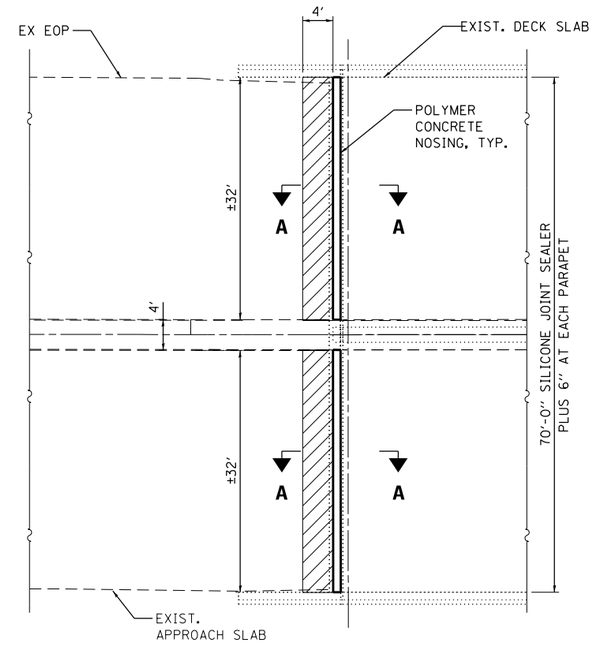

PAVEMENT REMOVAL & PATCHING PLAN
SOUTH APPROACH

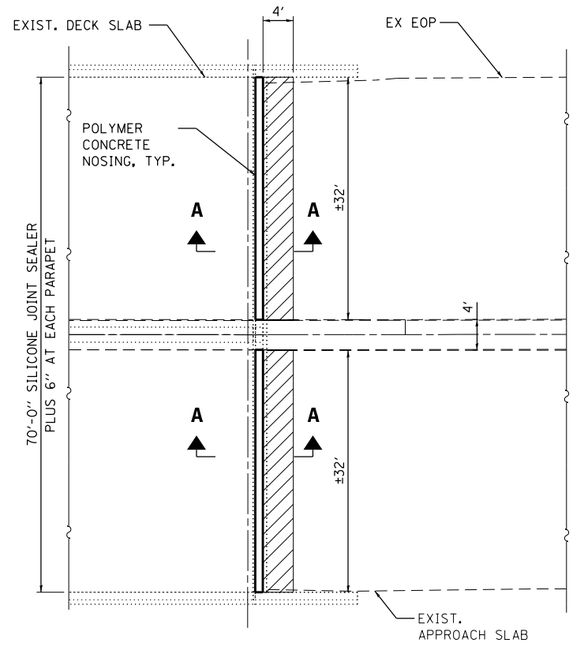

PAVEMENT REMOVAL & PATCHING PLAN
NORTH APPROACH

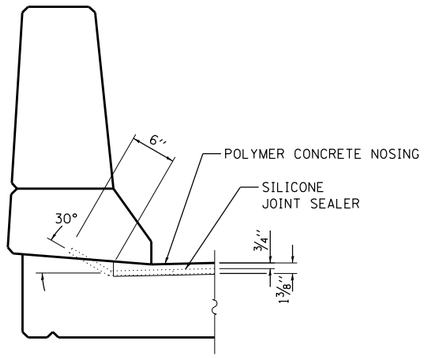

END OF SILICONE JOINT SEALER DETAIL

POLYMER CONCRETE NOSING SHALL BE LIMITED TO FACE OF EXISTING PARAPETS. BACKER ROD AND SILICONE JOINT SEALER SHALL EXTEND INTO JOINT BETWEEN PARAPETS AS SHOWN.

LEGEND

PAVEMENT PATCHING

BILL OF MATERIALS

CONCRETE REMOVAL	CU. YD.	15
POLYMER CONCRETE	CU. FT.	16
SILICONE JOINT SEALER, 2½″	FOOT	71
SILICONE JOINT SEALER, 3″	FOOT	71

HRG PROJECT NO.: 20071
HRG PROJ. CONTACT: 20071_204_approach.dgn
FILE NAME: IL_pdf.bwidfcfg
PLOT DRIVER: plotlabel.tbl
PEN TABLE:

HRGreen
HRGreen.com
Illinois Professional Design Firm # 184-001322

USER NAME = aunderw	DESIGNED - RAT	REVISED -	
	CHECKED - AEU	REVISED -	
PLOT SCALE =	DRAWN - WLH	REVISED -	
PLOT DATE = 5/12/2025	CHECKED - AEU	REVISED -	

KANE COUNTY
DIVISION OF TRANSPORTATION

ABUTMENT JOINT REPAIR DETAILS
STRUCTURE NO. 045–3115
SHEET NO. 7 OF 7 SHEETS

F.A.P. RTE.	SECTION	COUNTY	TOTAL SHEETS	SHEET NO.
336	23-00176-05-BR	KANE	7	7
		CONTRACT NO.		
	ILLINOIS FED. AID PROJECT			

F.A.P. RTE.	SECTION	COUNTY	TOTAL SHEETS	SHEET NO.
336	26-00176-06-BR	KANE	11	1

INDEX OF SHEETS

1. COVER SHEET
2. GENERAL NOTES, HIGHWAY STANDARDS, AND BILL OF MATERIALS
3. TRAFFIC STAGING PLANS – STAGE 1
4. TRAFFIC STAGING PLANS – STAGE 1
5. TRAFFIC STAGING PLANS – STAGE 2
6. TRAFFIC STAGING PLANS – STAGE 2
7. DECK DETAILS
8. EXPANSION JOINT REMOVAL
9. EXPANSION JOINT REPLACEMENT
10. PREFORMED JOINT STRIP SEAL
11. BAR SPLICER ASSEMBLY AND MECHANICAL SPLICER DETAILS

FOR LIST OF HIGHWAY STANDARDS, SEE SHEET NO. 2

TRAFFIC DATA

DESIGN DESIGNATIONS:
RANDALL ROAD = OTHER PRINCIPAL ARTERIAL

ADT = 45.500 (2023)

DESIGN SPEED = 50 MPH

POSTED SPEED = 50 MPH

KANE COUNTY
DIVISION OF TRANSPORTATION

PLANS FOR PROPOSED BRIDGE REPAIR

HANSON BRIDGE (S.N. 045–3115)
FAP ROUTE 336 / RANDALL ROAD
OVER TYLER CREEK, UPRR, CPKC, AND IC&E RR
SECTION 26–00176–06–BR



LOCATION OF SECTION INDICATED THUS: –

RANGE - 8 EAST

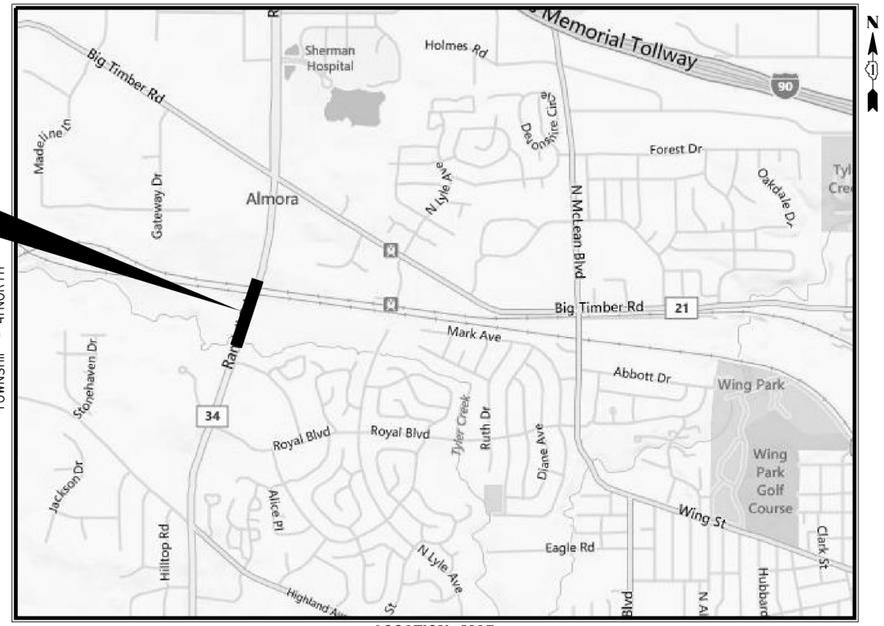

PROJECT LOCATION

LOCATION MAP
(NOT TO SCALE)

0 100′ 200′ — 1″ = 100′
0 50′ 100′ — 1″ = 50′
0 50′ 100′ — 1″ = 20′

FULL SIZE PLANS HAVE BEEN PREPARED USING STANDARD ENGINEERING SCALES, REDUCED SIZED PLANS WILL NOT CONFORM TO STANDARD SCALES. IN MAKING MEASUREMENTS ON REDUCED PLANS, THE ABOVE SCALES MAY BE USED

J.U.L.I.E.
JOINT UTILITY LOCATING INFORMATION FOR EXCAVATION
1–800–892–0123 OR 811

KANE COUNTY
DIVISION OF TRANSPORTATION

APPROVED _____ 20 ____

_____
KANE COUNTY ENGINEER

STRUCTURAL ENGINEER'S SIGN & SEAL

Andy Underwager

ANDREW E. UNDERWAGER, S.E.
EXPIRES: 11-30-2026

STATE OF ILLINOIS
ANDREW E. UNDERWAGER
081-006218
CHICAGO, IL
LICENSED STRUCTURAL ENGINEER

GENERAL NOTES

All construction shall be done in accordance with the "Standard Specifications for Road and Bridge Construction", January 1, 2022 Edition; The "Illinois Manual on Uniform Traffic Control Devices for Streets and Highways", latest edition; the details in the plans; and the Special Provisions included in the contract documents.

All traffic control and other advisory signs needed for construction are to be furnished by the Contractor in accordance with Article 107.14 of the Standard Specifications.

The Contractor will provide and install two (2) weighted sandbags on each Type I or Type II barricade used. One (1) weighted sandbag shall be installed across each bottom rail. All Type III barricades shall require a minimum of four (4) sandbags per barricade.

The Contractor will be required to comply with all state regulations regarding air, water, and noise pollution. The Contractor is prohibited from burning any material within or adjacent to the improvement.

Saw cutting prior to any removal items noted on the plans or directed by the Engineer shall be considered included in the cost of the item being removed.

The Contractor shall use care in removing items of work. Any damage done to existing items by the Contractor shall be repaired by the Contractor at his expense.

The Contractor shall protect existing utilities as well as existing lighting.

Underground utilities are not shown in the plans. Locations shall be identified and verified by the Contractor.

Plan dimensions and details relative to existing plans are subject to nominal construction variations. The Contractor shall field verify existing dimensions and details affecting new construction and make necessary approved adjustments prior to construction or ordering of materials. Such variations shall not be cause for additional compensation for a change in scope of the work, however, the Contractor will be paid for the quantity actually furnished at the unit price bid for the work.

The Contractor as required, shall obtain all necessary permits prior to commencing with construction.

The Contractor's operations and temporary storage activities shall be limited to the work area and/or construction limits. Any additional staging areas adjacent to the project are subject to prior approval by the Engineer. No additional compensation will be allowed to the Contractor for compliance with the above requirements.

It is the Contractor's responsibility to ascertain existing field conditions prior to bidding on this contract.

LANE CLOSURE

A minimum of one (1) through lane in each direction shall remain open on Randall Road at all times. Temporary traffic lanes shall be a minimum of 12' wide.

A minimum of one (1) through lanes in each direction shall remain open on Randall Road during peak traffic times. Peak traffic is defined as weekdays from 6 a.m. to 9 a.m. and from 3 p.m. to 6 p.m.
Night and/or weekend work will be allowed with appropriate traffic control and written approval from the Engineer.
If the Contractor elects to work at night, they shall provide supplemental lighting in conformance with Nighttime Work Zone Lighting in the Standard Specifications. Cost shall not be paid for separately, but shall be considered included under Traffic Control and Protection, Standard 701421.

Overtime and/or weekend work may be required and should be included in bid and will not be paid for as an extra cost to the contract.

No Lane Closures will be permitted on the following dates:
September 4 through September 7, 2026.

Advanced Lane Closure signs shall be removed or covered when lanes are not closed.

Workers signs shall be placed when workers are present and shall be removed at all other times.

PROJECT CONTACTS

Kane County Division of Transportation	Ken Mielke	(630) 406-7172
Nicor Gas		(630) 305-9500
ComEd		(630) 424-5704

TOTAL BILL OF MATERIALS

	ITEM	UNIT	TOTAL
	Concrete Removal	Cu Yd	12.6
	Concrete Superstructure	Cu Yd	12.6
	Protective Coat	Sq Yd	17.3
	Reinforcement Bars, Epoxy Coated	Pound	1,730
	Bar Splicers	Each	28
	Preformed Joint Strip Seal	Foot	140
	Mobilization	L. Sum	1
	Traffic Control and Protection (Special)	L. Sum	1
	Changeable Message Sign	Cal. Da.	60
	Modified Urethane Pavement Marking - Line 4"	Foot	4,986
	Modified Urethane Pavement Marking - Line 6"	Foot	624
*	Washout Basin	L. Sum	1
*	Bridge Deck Scarification 3/8 Inch	Sq. Yd.	9,035
*	Bridge Deck Thin Polymer Overlay 3/8"	Sq. Yd.	9,035

*Item requires a Special Provision

HIGHWAY STANDARDS

000001-09	Standard Symbols, Abbreviations and Patterns
001006	Decimal of an Inch and of a Foot
701421-08	Lane Closure, Multilane, Day Operations Only, for speeds > 45 MPH to 55 MPH
701901-11	Traffic Control Devices

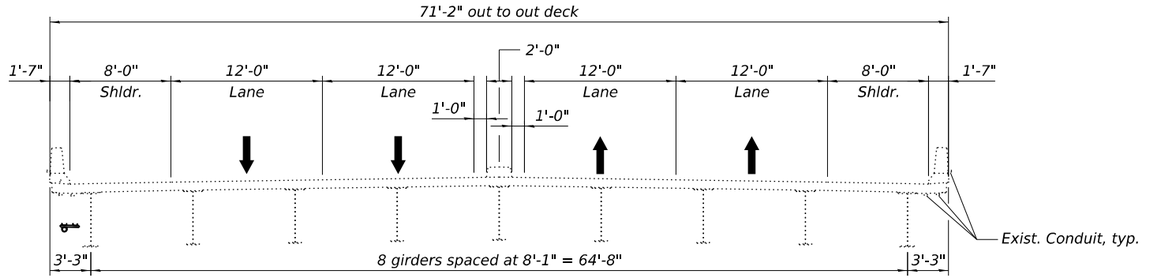

DECK CROSS SECTION (TYPICAL)
(Looking North)

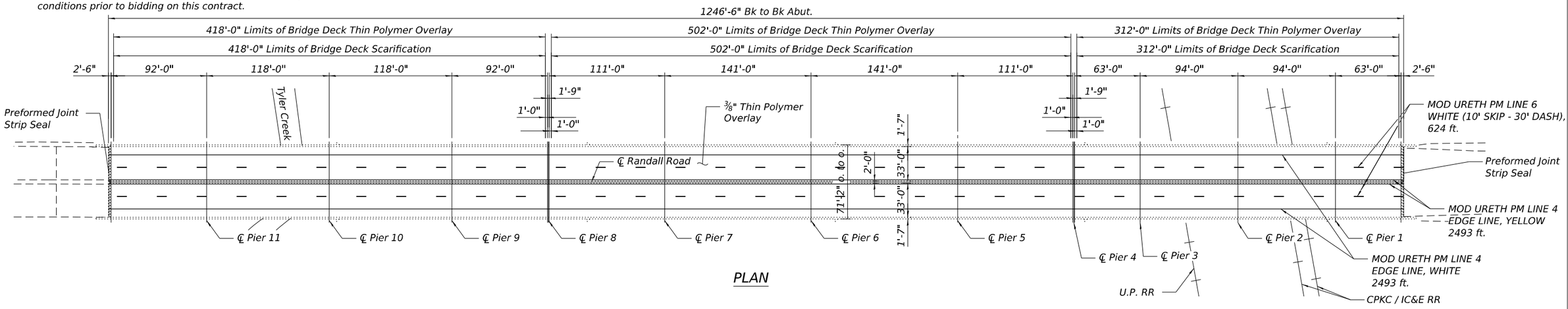

PLAN

HRG PROJECT NO:
HRG PROJ. CONTACT: 002_045-3115_gen01.dgn
FILE NAME: IL_pdf_bw.pltcfg
PLOT DRIVER: PLOTLABEL.tbl
PEN TABLE:

HRGreen
HRGreen.com
Illinois Professional Design Firm # 184-001322

USER NAME = raul.tejada	DESIGNED - RAT	REVISED -	
	CHECKED - AEU	REVISED -	
PLOT SCALE =	DRAWN - JJH	REVISED -	
PLOT DATE = 7/31/2026	CHECKED - AEU	REVISED -	

KANE COUNTY
DIVISION OF TRANSPORTATION

GENERAL NOTES
HIGHWAY STANDARDS AND BILL OF MATERIALS
SHEET NO. 2 OF 11 SHEETS

F.A.P. RTE.	SECTION	COUNTY	TOTAL SHEETS	SHEET NO.
336	26-00176-06-BR	KANE	11	2
		CONTRACT NO.		
	ILLINOIS	FED. AID PROJECT		

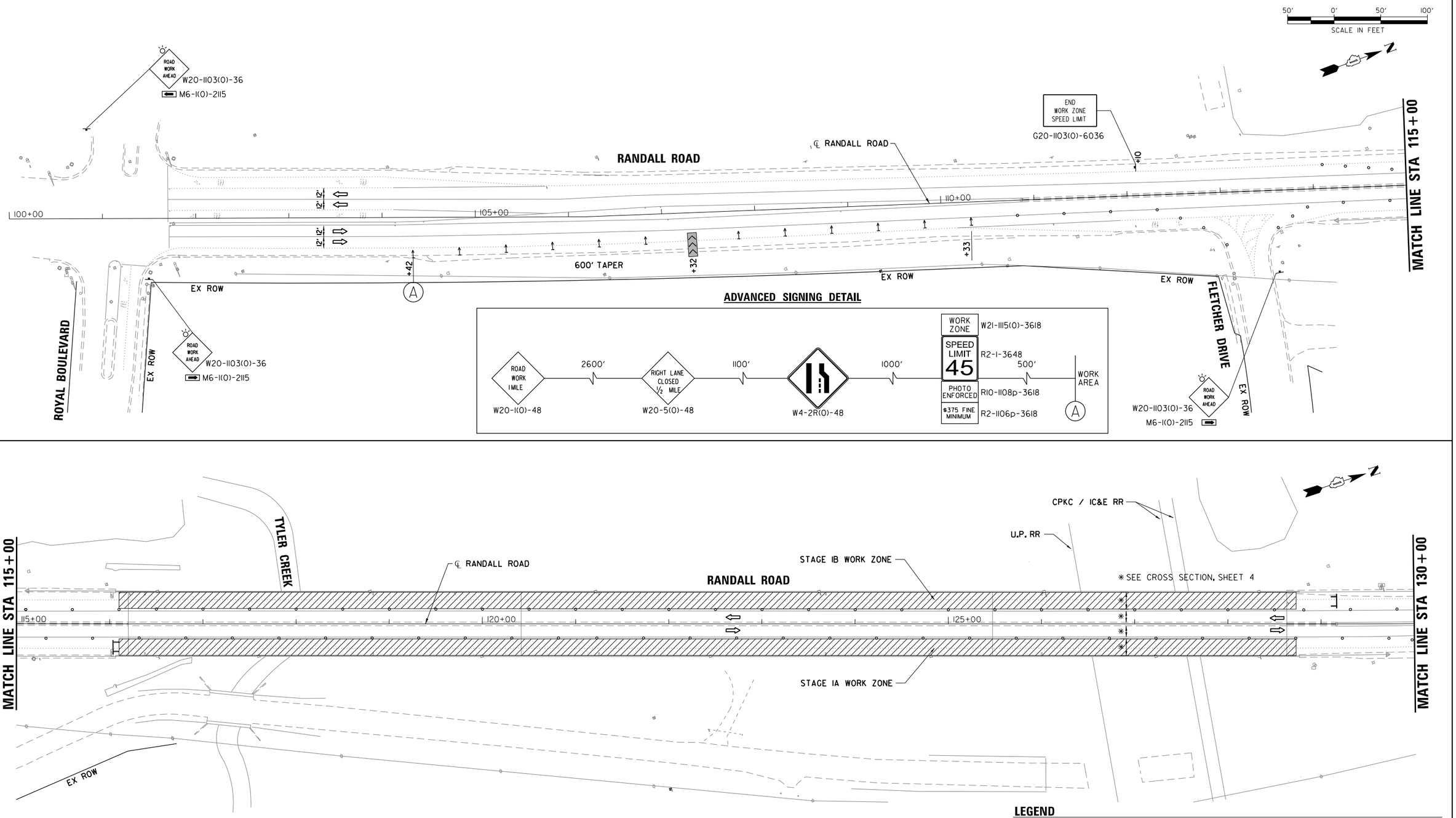

HRG PROJECT NO.:
HRG PROJ. CONTACT:
FILE NAME: 003_045-3115_mot1-01.dgn
PLOT DRIVER: IL_pdf_bw_pltcfg
PEN TABLE: PLOTLABEL.tbl

HRGreen

HRGreen.com
Illinois Professional Design Firm
184-001322

USER NAME = raul.tejada	DESIGNED - MJW	REVISED -	
	DRAWN - VS	REVISED -	
PLOT SCALE = 100.0000 ' / In.	CHECKED - AEU	REVISED -	
PLOT DATE = 7/30/2026	DATE - 7/22/2025	REVISED -	

KANE COUNTY
DIVISION OF TRANSPORTATION

TRAFFIC STAGING PLANS
STAGE 1

SCALE: 1" = 100' | SHEET NO. 3 OF 11 SHEETS | STA. 100+00 TO STA. 130+00

F.A.P. RTE.	SECTION NO.	COUNTY	TOTAL SHEETS	SHEET NO.
336	26-00176-06-BR	KANE	11	3
		CONTRACT NO.		
	ILLINOIS FED. AID PROJECT			

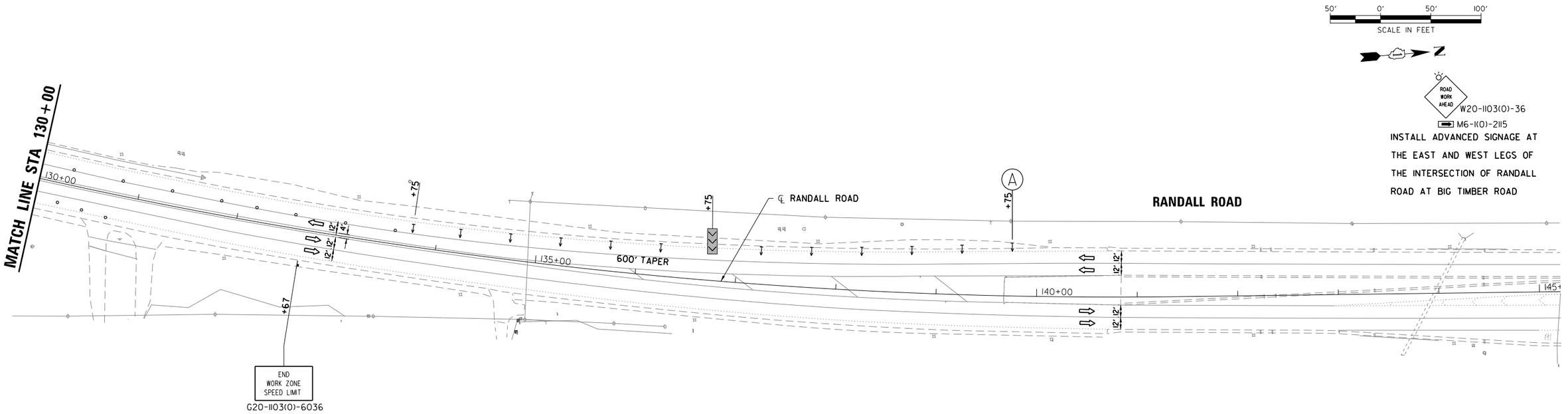

ADVANCED SIGNING DETAIL

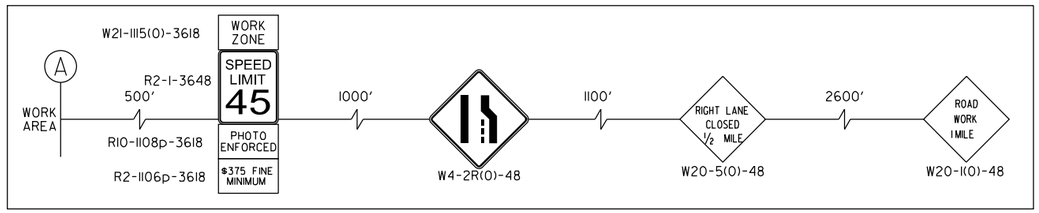

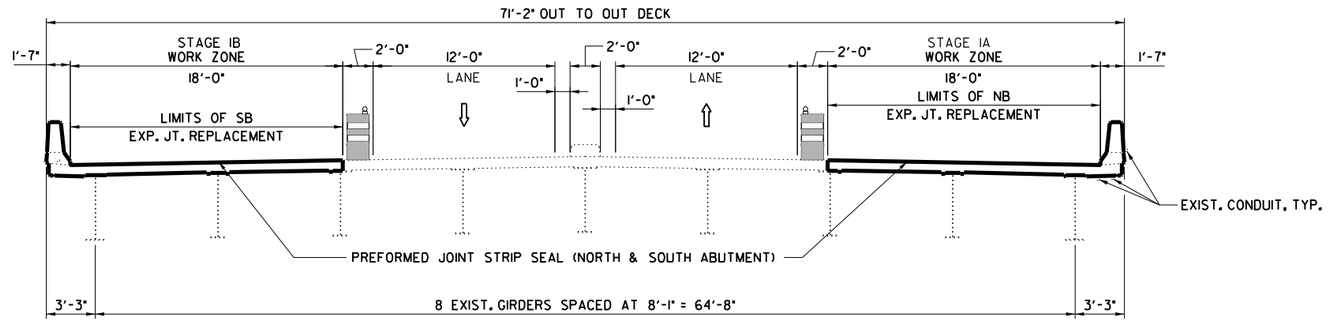

DECK CROSS SECTION – STAGE 1

(LOOKING NORTH)

LEGEND

- WORK ZONE AREA
- DRUM, BARRICADE OR VERTICAL PANEL **
- DIRECTION INDICATOR BARRICADE
- SIGN ON PORTABLE OR PERMANENT SUPPORT
- TYPE III BARRICADES
- ARROW BOARD

** TRAFFIC CONTROL DEVICE SPACING:
50' C-C ON TANGENTS
25' C-C ON TAPERS OR LANE SHIFTS
12' C-C ON RADII

HRG PROJECT NO.:
HRG PROJ. CONTACT:
FILE NAME: 004_045-3115_mot1-02.dgn
PLOT DRIVER: IL_pdf_bw.pltcfg
PEN TABLE: PLOTLABEL.tbl

HRGreen
HRGreen.com
Illinois Professional Design Firm # 184-001322

USER NAME = raul.tejada	DESIGNED - MJW	REVISED -
	DRAWN - VS	REVISED -
PLOT SCALE = 100.0000 ' / in.	CHECKED - AEU	REVISED -
PLOT DATE = 7/30/2026	DATE - 7/22/2025	REVISED -

KANE COUNTY
DIVISION OF TRANSPORTATION

TRAFFIC STAGING PLANS
STAGE 1

SCALE: 1" = 100' | SHEET NO. 4 OF 11 SHEETS | STA. 130+00TO STA. 145+00

F.A.P. RTE.	SECTION NO.	COUNTY	TOTAL SHEETS	SHEET NO.
336	26-00176-06-BR	KANE	11	4
		CONTRACT NO.		
		ILLINOIS FED. AID PROJECT		

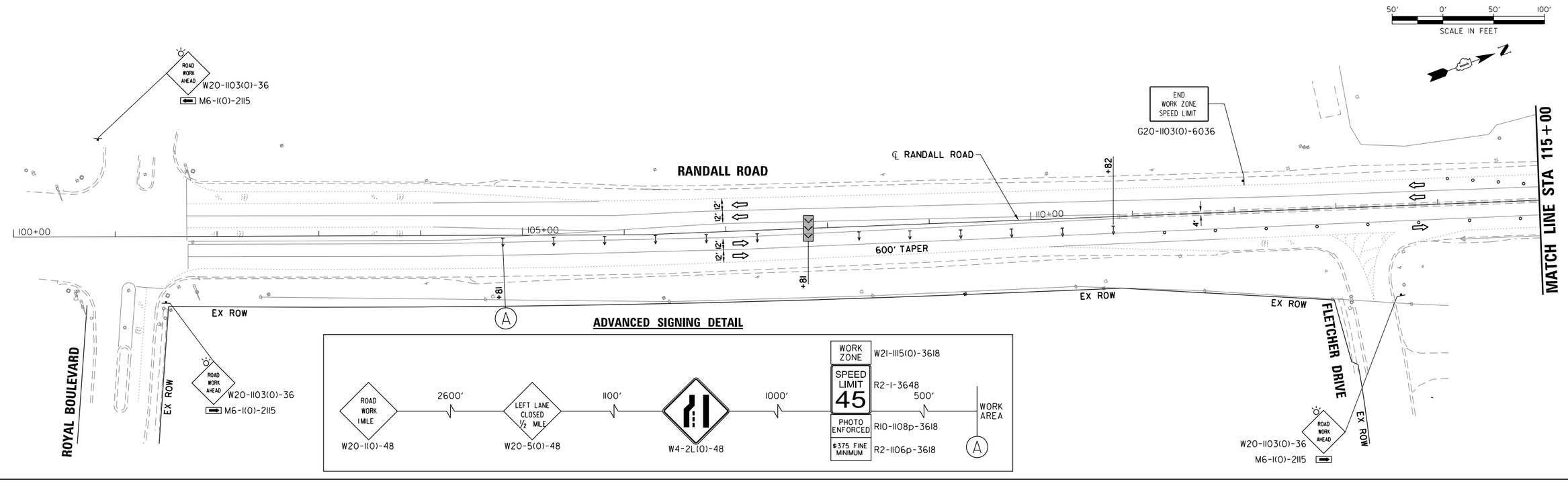

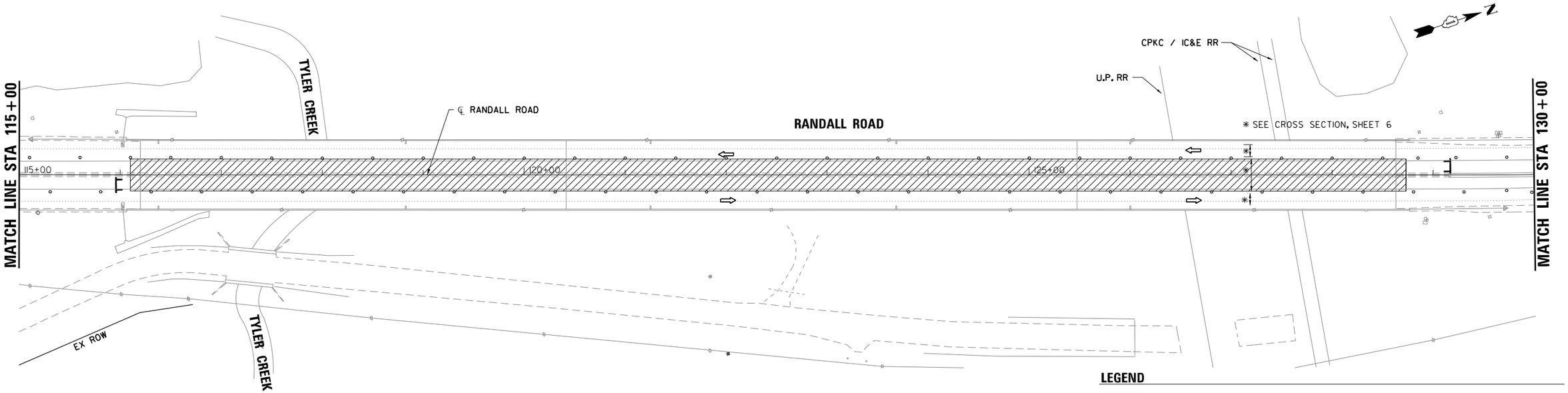

LEGEND

- WORK ZONE AREA
- DRUM, BARRICADE OR VERTICAL PANEL ✳✳
- DIRECTION INDICATOR BARRICADE
- SIGN ON PORTABLE OR PERMANENT SUPPORT
- TYPE III BARRICADES
- ARROW BOARD

✳✳ TRAFFIC CONTROL DEVICE SPACING:
50' C-C ON TANGENTS
25' C-C ON TAPERS OR LANE SHIFTS
12' C-C ON RADII

HRG PROJECT NO.:
HRG PROJ CONTACT: 005_045-3115_mo12-01.dgn
FILE NAME: IL_pdf_bw.pltcfg
PLOT DRIVER: PLOTLABEL.tbl
PEN TABLE:

HRGreen
HRGreen.com
Illinois Professional Design Firm
184-001322

USER NAME = raul.tejada	DESIGNED - MJW	REVISED -	
	DRAWN - VS	REVISED -	
PLOT SCALE = 100.0000 ' / In.	CHECKED - AEU	REVISED -	
PLOT DATE = 7/30/2026	DATE - 7/22/2025	REVISED -	

KANE COUNTY
DIVISION OF TRANSPORTATION

TRAFFIC STAGING PLANS
STAGE 2

SCALE: 1" = 100' | SHEET NO. 5 OF 11 SHEETS | STA. 100+00 TO STA. 130+00

F.A.P. RTE.	SECTION NO.	COUNTY	TOTAL SHEETS	SHEET NO.
336	26-00176-06-BR	KANE	11	5
		CONTRACT NO.		
	ILLINOIS FED. AID PROJECT			

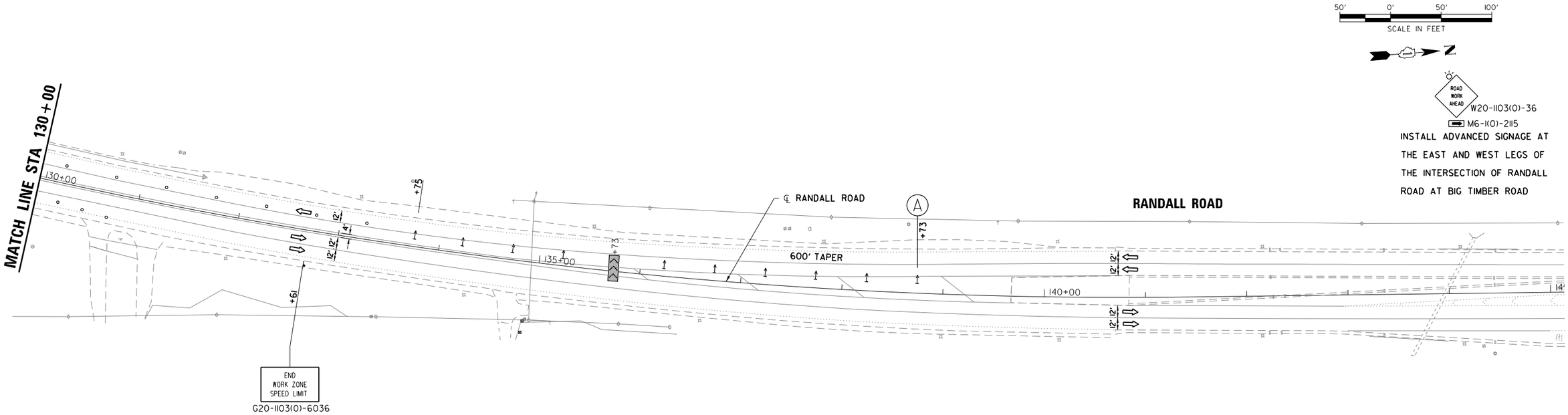

ADVANCED SIGNING DETAIL

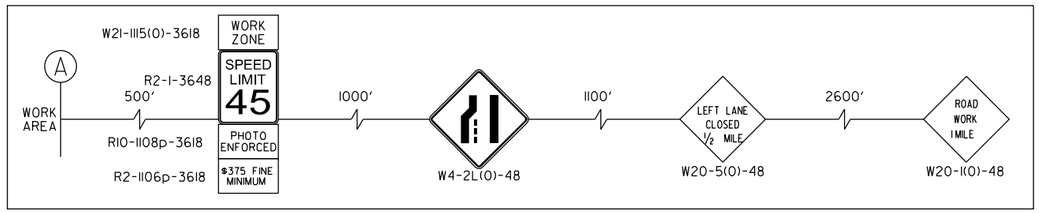

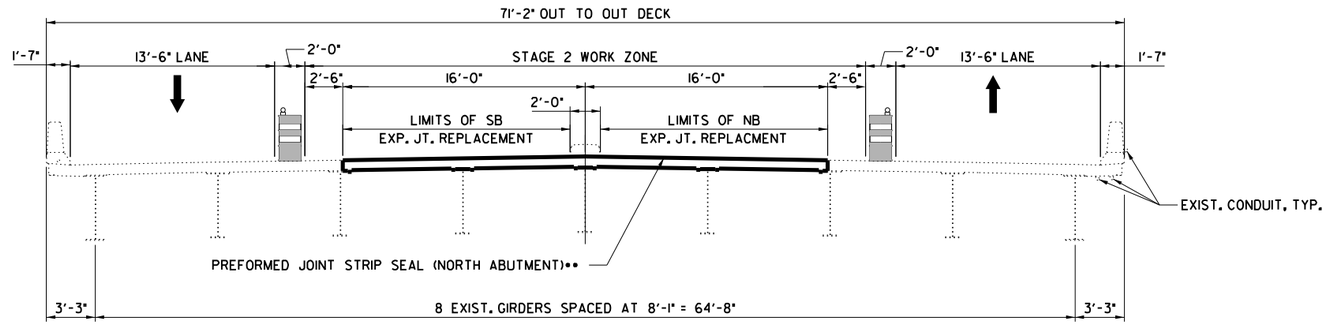

DECK CROSS SECTION – STAGE 2

(LOOKING NORTH)

** SPLICES (IF NEEDED) SHALL CONFORM TO SPECIFICATIONS AND MANUFACTURER'S DIRECTIONS

LEGEND

- WORK ZONE AREA
- DRUM, BARRICADE OR VERTICAL PANEL **
- DIRECTION INDICATOR BARRICADE
- SIGN ON PORTABLE OR PERMANENT SUPPORT
- TYPE III BARRICADES
- ARROW BOARD

** TRAFFIC CONTROL DEVICE SPACING:
50' C-C ON TANGENTS
25' C-C ON TAPERS OR LANE SHIFTS
12' C-C ON RADII

HRG PROJECT NO.:
HRG PROJ CONTACT: 006_045_3115_mot2-02.dgn
FILE NAME: IL_pdf_bw.pltcfg
PLOT DRIVER:
PEN TABLE: PLOTLABEL.tbl

HRGreen
HRGreen.com
Illinois Professional Design Firm # 184-001322

USER NAME = raul.tejada	DESIGNED - MJW	REVISED -	
	DRAWN - VS	REVISED -	
PLOT SCALE = 100.0000 ' / in.	CHECKED - AEU	REVISED -	
PLOT DATE = 7/30/2026	DATE - 7/22/2025	REVISED -	

KANE COUNTY
DIVISION OF TRANSPORTATION

TRAFFIC STAGING PLANS
STAGE 2

SCALE: 1" = 100' | SHEET NO. 6 OF 11 SHEETS | STA. 130+00 TO STA. 145+00

F.A.P. RTE.	SECTION NO.	COUNTY	TOTAL SHEETS	SHEET NO.
336	26-00176-06-BR	KANE	11	6
		CONTRACT NO.		
		ILLINOIS	FED. AID PROJECT	

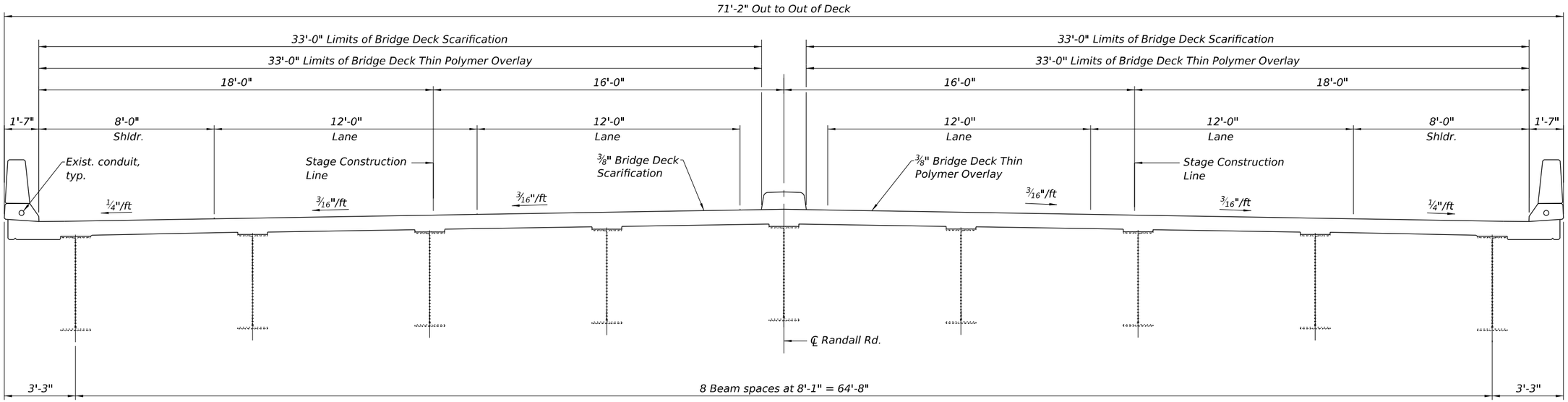

DECK CROSS SECTION

(Looking North)

Note:
Coordinate with Suggested Maintenance of Traffic Plans

HRG PROJECT NO.:
HRG PROJ. CONTACT:
FILE NAME: 007_045-3115_Deck Detail.dgn
PLOT DRIVER=L_pdf_bw.plotcfg
PEN TABLE=PLOTLABEL.tbl

HRGreen.com
Illinois Professional Design Firm
184-001322

USER NAME = raul.tejada	DESIGNED - RAT	REVISED -
	CHECKED - AEU	REVISED -
PLOT SCALE =	DRAWN - JJH	REVISED -
PLOT DATE = 7/30/2026	CHECKED - AEU	REVISED -

KANE COUNTY
DIVISION OF TRANSPORTATION

DECK DETAILS
STRUCTURE NO. 045-3115
SHEET NO. 7 OF 11 SHEETS

F.A.P. RTE.	SECTION	COUNTY	TOTAL SHEETS	SHEET NO.
336	26-00176-06-BR	KANE	11	7
		CONTRACT NO.		
	ILLINOIS FED. AID PROJECT			

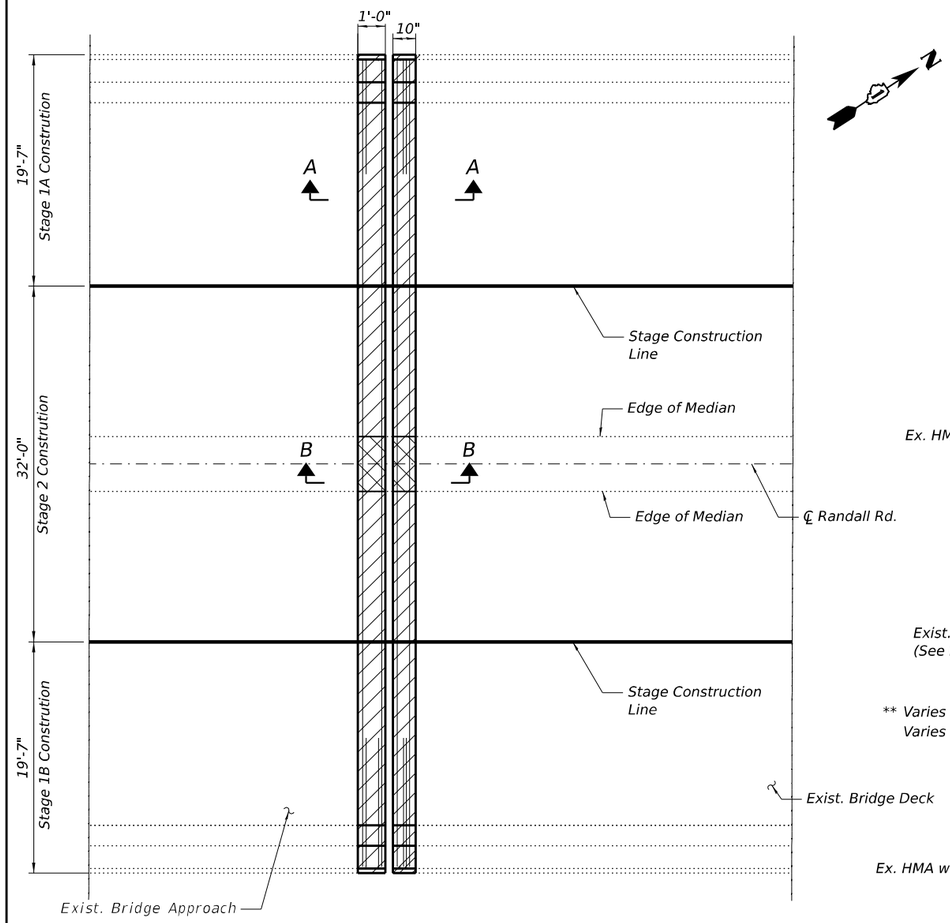

PLAN

(South Abut. Joint shown,
North Abut. Joint opposite hand)

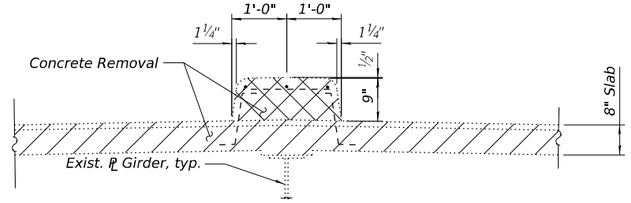

SECTION AT MEDIAN

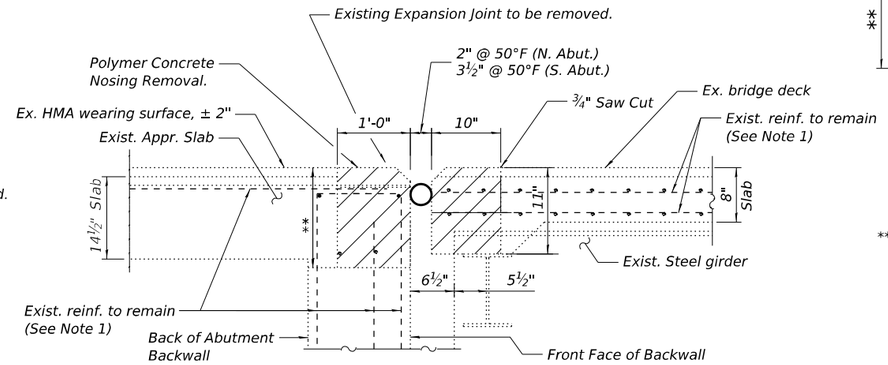

** Varies 1'-2⅝" to 1'-9½" (North Abut.)
Varies 1'-2½" to 1'-9⅜" (South Abut.)

SECTION A-A

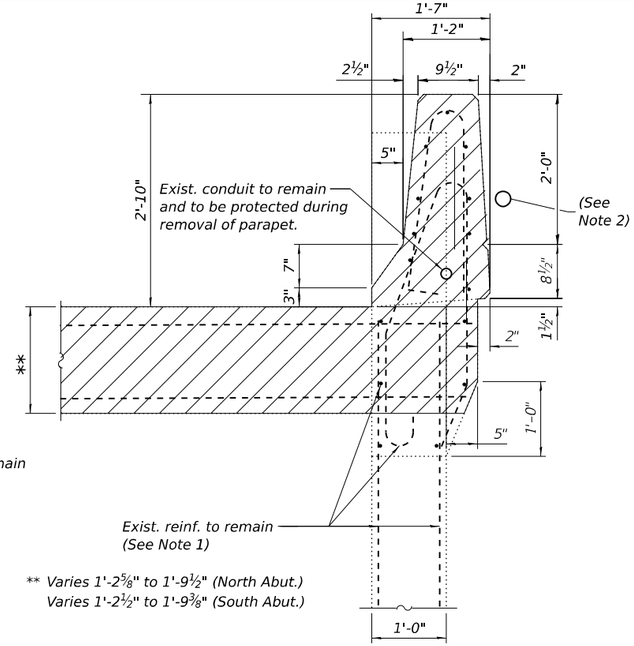

** Varies 1'-2⅝" to 1'-9½" (North Abut.)
Varies 1'-2½" to 1'-9⅜" (South Abut.)

SECTION THRU PARAPET AT APPROACH

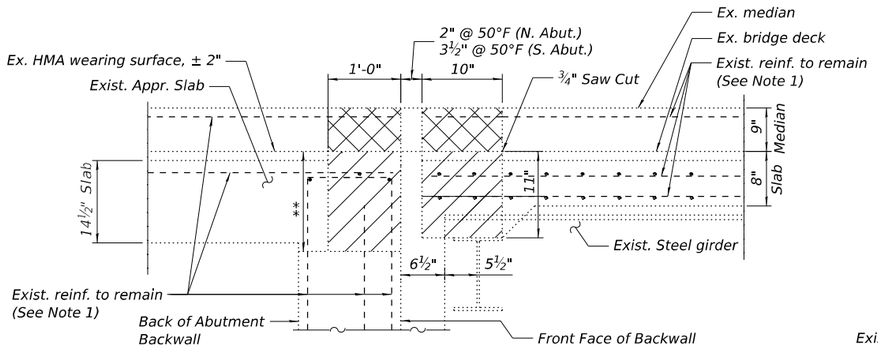

** Varies 1'-2⅝" to 1'-9½" (North Abut.)
Varies 1'-2½" to 1'-9⅜" (South Abut.)

SECTION B-B

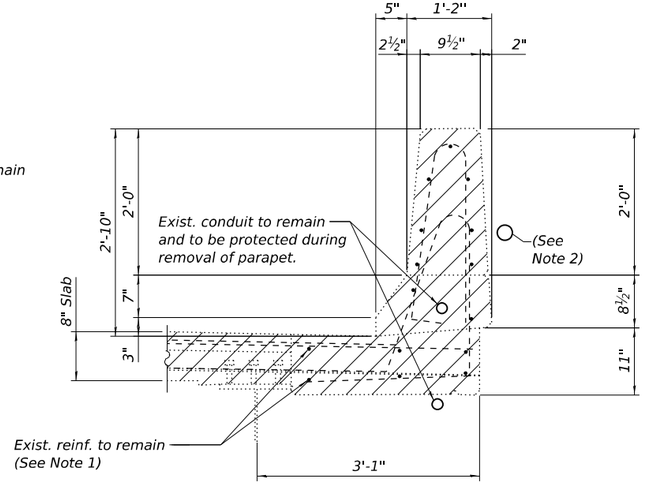

SECTION THRU PARAPET MAIN SPAN

LEGEND

Limits of Removal

Median Removal

Notes:

1. Existing reinforcement bars extending into the removal area shall be cleaned, straightened and incorporated into new construction. Any reinforcement bars that are damaged during concrete removal operations shall be repaired or replaced using an approved bar splicer or anchorage system. Cost included with Concrete Removal.
2. Contractor to protect and reattach existing conduit if needed.
3. Removal of polymer concrete nosing and expansion joint will be paid for as Concrete Removal.

BILL OF MATERIALS

ITEM	UNIT	TOTAL
Concrete Removal	Cu.Yd.	12.6

HRG PROJECT NO.:
HRG PROJ. CONTACT:
FILE NAME: 008_045-3115_Expansion Joints Rem.dgn
PLOT DRIVER: ...pdf_bw.pltcfg
PEN TABLE: PLOT-ABEL.tbl

HRGreen.com
Illinois Professional Design Firm
184-001322

USER NAME = raul.tejada	DESIGNED - RAT	REVISED -	
	CHECKED - AEU	REVISED -	
PLOT SCALE =	DRAWN - JJH	REVISED -	
PLOT DATE = 8/4/2026	CHECKED - AEU	REVISED -	

KANE COUNTY
DIVISION OF TRANSPORTATION

EXPANSION JOINT REMOVAL
STRUCTURE NO. 045–3115
SHEET NO. 8 OF 11 SHEETS

F.A.P. RTE.	SECTION	COUNTY	TOTAL SHEETS	SHEET NO.
336	26-00176-06-BR	KANE	11	8
		CONTRACT NO.		
		ILLINOIS FED. AID PROJECT		

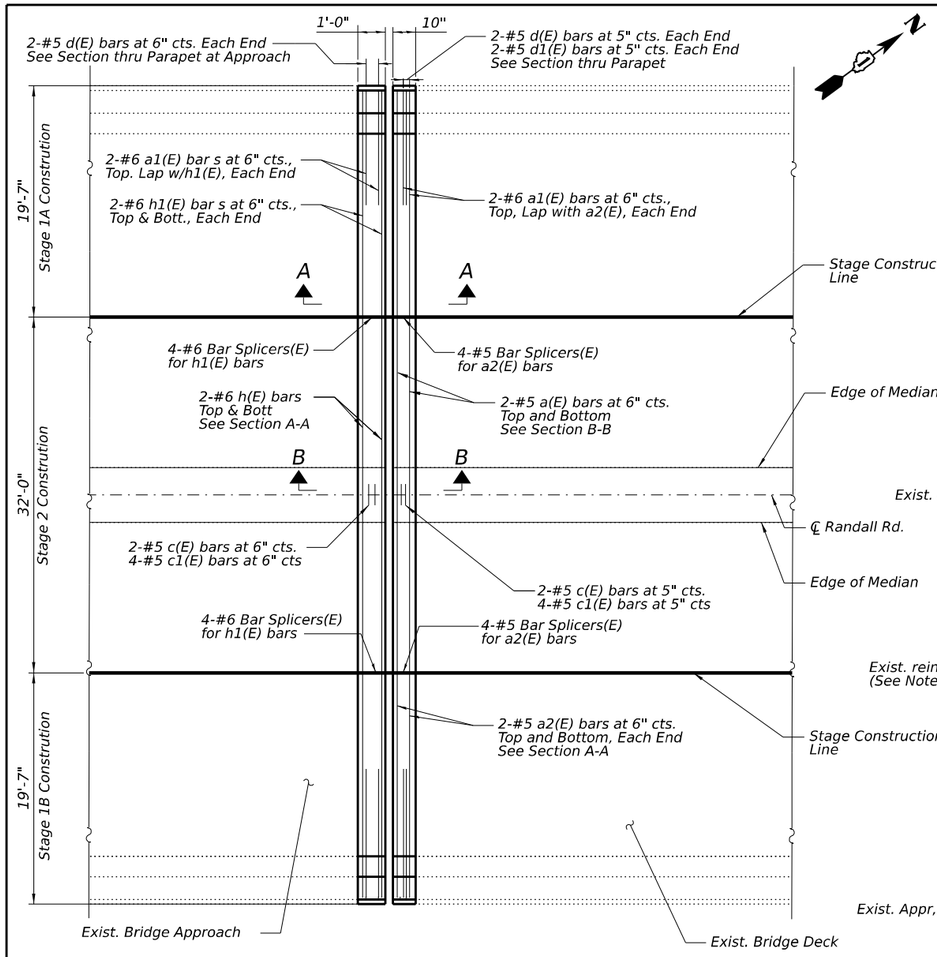

PLAN

(South Abut. Joint shown,
North Abut. Joint opposite hand)

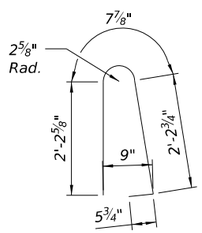

BAR d(E)

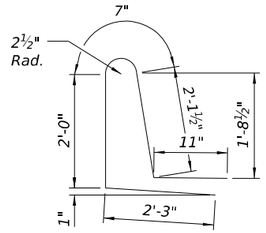

BAR d1(E)

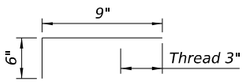

BAR c(E)

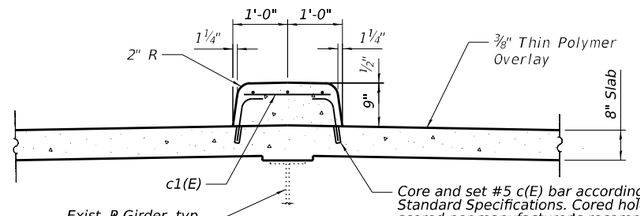

SECTION AT MEDIAN

(Deck Side)

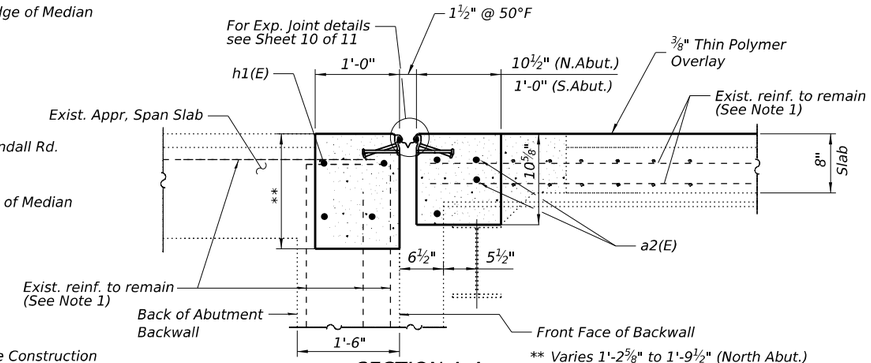

SECTION A-A

** Varies 1'-2⅝" to 1'-9½" (North Abut.)
Varies 1'-2½" to 1'-9⅜" (South Abut.)

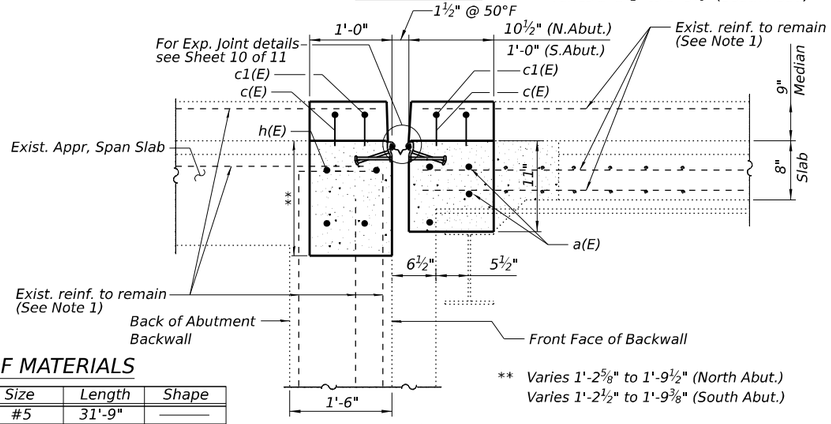

** Varies 1'-2⅝" to 1'-9½" (North Abut.)
Varies 1'-2½" to 1'-9⅜" (South Abut.)

SECTION B-B

BILL OF MATERIALS

Bar	No.	Size	Length	Shape
a(E)	8	#5	31'-9"	——
a1(E)	16	#6	4'-6"	——
a2(E)	16	#5	19'-1"	——
c(E)	8	#5	1'-3"	⌐
c1(E)	16	#5	1'-8"	——
d(E)	16	#5	5'- 7"	⌐
d1(E)	8	#5	7'- 11"	⌐
h(E)	8	#6	31'- 9"	——
h1(E)	16	#6	19'-1"	——
Concrete Superstructure			Cu. Yd.	12.6
Reinforcement Bars, Epoxy Coated			Pound	1,730

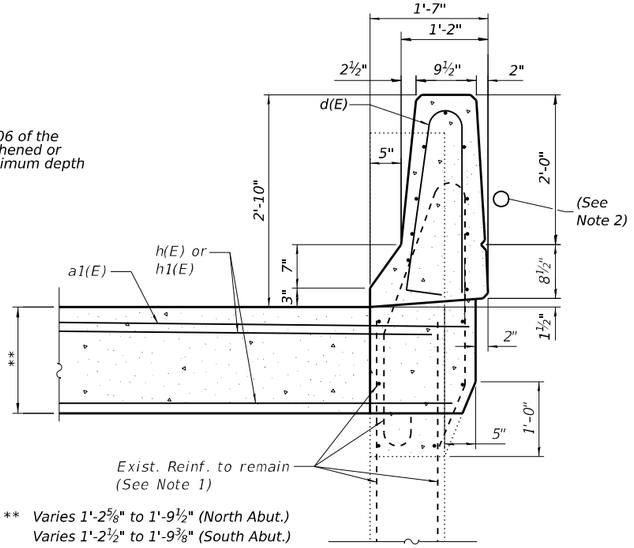

** Varies 1'-2⅝" to 1'-9½" (North Abut.)
Varies 1'-2½" to 1'-9⅜" (South Abut.)

SECTION THRU PARAPET AT APPROACH

SECTION THRU PARAPET MAIN SPAN

Notes:
1. Existing reinforcement bars extending into the removal area shall be cleaned, straightened and incorporated into new construction. Any reinforcement bars that are damaged during concrete removal operations shall be repaired or replaced using an approved bar splicer or anchorage system. Cost included with Concrete Removal.
2. Contractor to protect and reattach existing conduit if needed.

HRG PROJECT NO.:
HRG PROJ. CONTACT:
FILE NAME: 009_045-3115_Expansion Joints Replace.dgn
PLOT DRIVER=ilc_pdf_bw.plc?g
PEN TABLE=PLOTLABEL.tbl

HRGreen
HRGreen.com
Illinois Professional Design Firm
184-001322

USER NAME = raul.tejada	DESIGNED - RAT	REVISED -	
	CHECKED - AEU	REVISED -	
PLOT SCALE =	DRAWN - JJH	REVISED -	
PLOT DATE = 8/4/2026	CHECKED - AEU	REVISED -	

KANE COUNTY
DIVISION OF TRANSPORTATION

EXPANSION JOINT REPLACEMENT
STRUCTURE NO. 045–3115
SHEET NO. 9 OF 11 SHEETS

F.A.P. RTE.	SECTION	COUNTY	TOTAL SHEETS	SHEET NO.
336	26-00176-06-BR	KANE	11	9
		CONTRACT NO.		
	ILLINOIS FED. AID PROJECT			

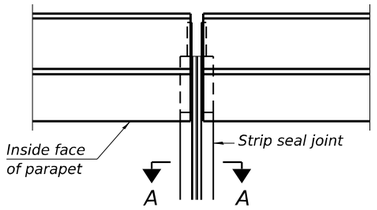

PLAN AT PARAPET

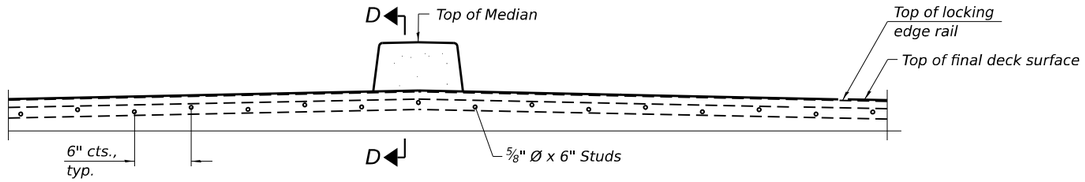

SECTION AT MEDIAN

Notes:

The strip seal shall be made continuous and shall have a minimum thickness of ¼". The configuration of the strip seal shall match the configuration of the locking edge rails. Open or "webbed" strip seal gland configurations are not permitted. The gland shall be sized for a maximum rated movement of 4 inches.

The locking edge rails depicted are configured for typical applications and are conceptual only. The actual configuration of the locking edge rails and matching strip seal may vary from manufacturer to manufacturer provided they fit the application and meet the minimum anchorage shown. Flanged edge rails, however, will not be allowed. Locking edge rails may exceed the 4½" maximum depth provided the anchorage system is revised according to the manufacturer's recommendation.

The manufacturer's recommended installation methods shall be followed.

All steel components shall be galvanized after fabrication according to Article 520.03 of the Standard Specifications.

The Maximum space between locking edge rail segments shall be 3/16" and sealed with a suitable sealant; however, any rail joint within 10' measured perpendicular to the face of the curb or parapet shall be welded as shown in the locking edge rail splice detail.

The concrete opening below the strip seal will vary based on the locking edge rail chosen by the Contractor. Deck and parapet lengths shown elsewhere in the plans are dimensioned to the concrete opening, not the joint opening, and are based on the rolled locking edge rail. If the Contractor elects to use a different locking edge rail, dimensional adjustments may be required.

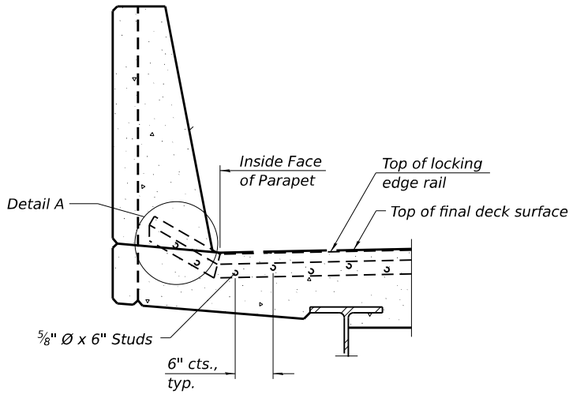

SECTION AT PARAPET

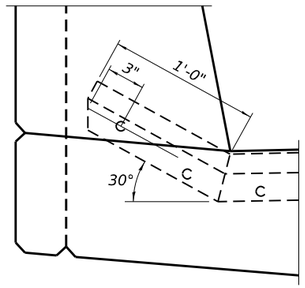

DETAIL A

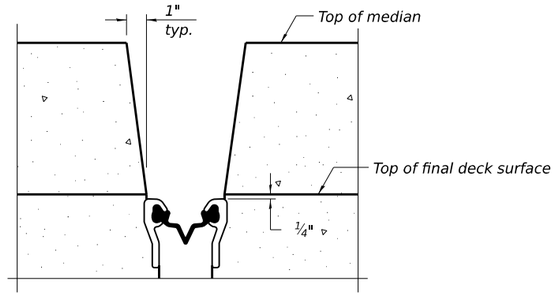

SECTION D-D

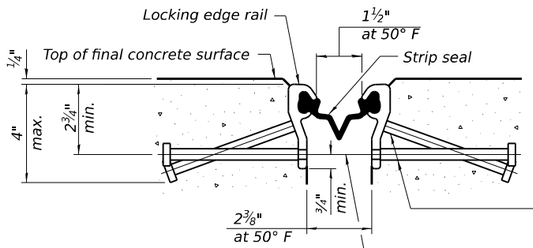

SHOWING ROLLED RAIL JOINT

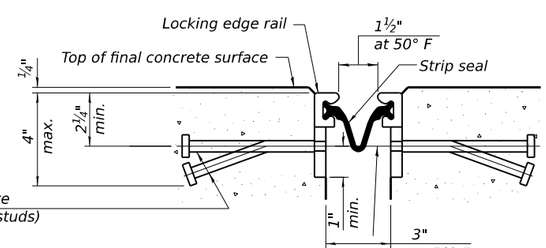

SHOWING WELDED RAIL JOINT

* ⅝" Ø x 6" studs @ 6" cts. (alternate angled/bent studs with horizontal studs)

⅜" Ø threaded rods in 7/16" Ø holes at 4'-0"± cts. for holding the proper joint opening based on the temperature during the deck pour. Place to miss studs. All rods shall be burned, or sawed off flush with the plates within 90 minutes after concrete is set.

SECTION A-A

** Granular or solid flux filled headed studs conforming to Article 1006.32 of the Std. Specs., automatically end welded.*

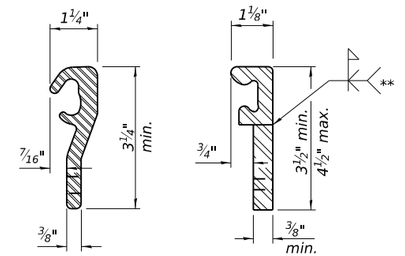

ROLLED (EXTRUDED) RAIL

WELDED RAIL

LOCKING EDGE RAILS

** *Back gouge not required if complete joint penetration is verified by mock-up.*

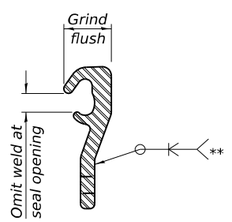

LOCKING EDGE RAIL SPLICE

The inside of the locking edge rail groove shall be free of weld residue. Rolled rail shown, welded rail similar.

BILL OF MATERIAL

Item	Unit	Total
Preformed Joint Strip Seal	Foot	140

HRG PROJECT NO.:
HRG PROJ. CONTACT:
FILE NAME: 010_045-3115_Preformed Joint Strip Seal.dgn
PLOT DRIVER=IL_pdf_bw.plt
PEN TABLE: plotlabel.tbl

HRGreen
HRGreen.com
Illinois Professional Design Firm
184-001322

USER NAME = raul.tejada	DESIGNED - RAT	REVISED -
	CHECKED - AEU	REVISED -
PLOT SCALE =	DRAWN - JJH	REVISED -
PLOT DATE = 7/30/2026	CHECKED - AEU	REVISED -

KANE COUNTY
DIVISION OF TRANSPORTATION

PREFORMED JOINT STRIP SEAL
STRUCTURE NO. 045–3115
SHEET NO. 10 OF 11 SHEETS

F.A.P. RTE.	SECTION	COUNTY	TOTAL SHEETS	SHEET NO.
336	26-00176-06-BR	KANE	11	10
		CONTRACT NO.		
	ILLINOIS FED. AID PROJECT			

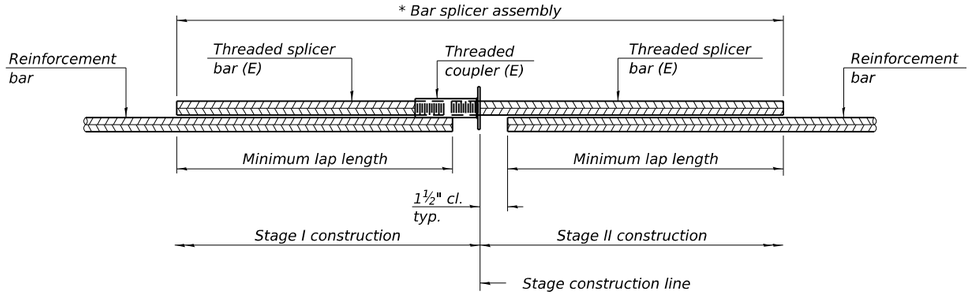

STANDARD BAR SPLICER ASSEMBLY PLAN

Only bar splicer assemblies as presented on the approved QPL list may be used.

Threaded splicer bar length = min. lap length + 1½" + thread length

** Epoxy not required on Bar Splicer Assembly components used in conjunction with black bars.*

Location	Bar size	No. assemblies required	Minimum lap length
North Abutment	#5	8	2'-9"
South Abutment	#5	8	2'-9"
North Abutment	#6	8	4'-0"
South Abutment	#6	8	4'-0"

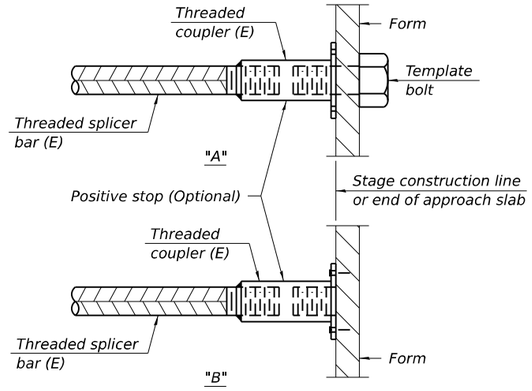

INSTALLATION AND SETTING METHODS

"A" : Set bar splicer assembly by means of a template bolt.
"B" : Set bar splicer assembly by nailing to wood forms or cementing to steel forms.
(E) : Indicates epoxy coating.

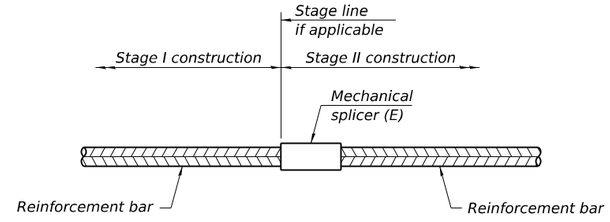

STANDARD MECHANICAL SPLICER

Location	Bar size	No. assemblies required

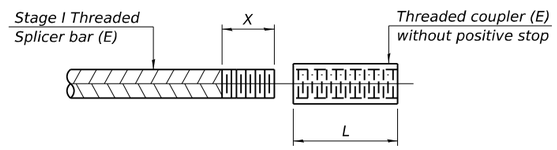

THREADING OF ASSEMBLIES

The threaded length "X" shall be no more than L/2. The bar should be tightened until 0-1 thread(s) is/are exposed.

Notes:

Splicer bars shall be deformed with threaded ends and have a minimum 60 ksi yield strength.

All reinforcement shall be lapped and tied to the splicer bars.

Bar splicer assemblies shall be epoxy coated according to the requirements for reinforcement bars. See Section 508 of the Standard Specifications.

See approved list of bar splicer assemblies and mechanical splicers for alternatives.

HRG PROJECT NO.:
HRG PROJ. CONTACT:
FILE NAME: 011_045-3115_Bar Splicers.dgn
PLOT DRIVER=il_pdf_bw.pltcfg
PEN TABLE=portobet.tbl

HRGreen.com
Illinois Professional Design Firm # 184-001322

USER NAME = raul.tejada	DESIGNED - RAT	REVISED -	
	CHECKED - AEU	REVISED -	
PLOT SCALE =	DRAWN - JJH	REVISED -	
PLOT DATE = 7/30/2026	CHECKED - AEU	REVISED -	

KANE COUNTY
DIVISION OF TRANSPORTATION

BAR SPLICER ASSEMBLY AND MECHANICAL SPLICER DETAILS
STRUCTURE NO. 045–3115
SHEET NO. 11 OF 11 SHEETS

F.A.P. RTE.	SECTION	COUNTY	TOTAL SHEETS	SHEET NO.
336	26-00176-06-BR	KANE	11	11
		CONTRACT NO.		
	ILLINOIS FED. AID PROJECT			

KANE COUNTY

DIVISION of TRANSPORTATION

Michael Zakosek, P.E.
Director of Transportation
County Engineer

41W011 Burlington Road
St. Charles, IL 60175
Phone: (630) 584-1170

Section 26-0017-06-BR
Randall Road at Claude Hanson Bridge Joint Replacement and Thin Lift Epoxy Overlay

August 12th, 2026

Addendum #1

- The BidNet pay items have been updated in include item 50800515: Bar Splicers. The item was included on the .pdf Bid Packet document and in the .pdf Final Plans document, but was not included in the BidNet pay items spreadsheet.
- Pay items Z0012754 Structural Repair of Concrete (Depth Equal to or Less than 5 Inches) and Z0016001 Deck Slab Repair (Full Depth, Type I) were added to address potential patching necessary during the scarification process.

Note:
This addendum is hereby declared a part of the proposal documents for the project designated above, and in case of conflict, the addendum shall govern. Bidders shall incorporate in their proposal this addendum in acknowledgement of receipt of the addendum and that it is reflected in the proposal submitted.

Illinois Department of Transportation

Schedule of Prices

Contractor's Name

Contractor's Address | City | State | Zip Code

Local Public Agency: Kane County Division of Transportation | County: Kane | Section Number: 26-00176-06-BR

Route(s) (Street/Road Name): Randall Road (SN 045-3115)

Schedule for Multiple Bids

Combination Letter	Section Included in Combinations	Total

Schedule for Single Bid

(For complete information covering these items, see plans and specifications.)

Item Number	Items	Unit	Quantity	Unit Price	Total
50102400	Concrete Removal	Cu. Yd.	12.6		
50300255	Concrete Superstructure	Sq. Yd.	12.6		
50300300	Protective Coat	Sq. Yd.	17.3		
50800205	Reinforcement Bars, Epoxy Co	Pound	1,730		
50800515	Bar Splicers	Each	28		
52000110	Preformed Joint Strip Seal	Foot	140		
67100100	Mobilization	L. Sum	1		
70100310	TC&P (Special)	L. Sum	1		
70107025	Changeable Message Sign	Cal. Day	60		
78009004	Mod Urethane Pavt Mkg - 4"	Foot	4,986		
78009005	Mod Urethane Pavt Mkg - 6"	Foot	624		
X0326806	Washout Basin	L. Sum	1		
Z0012102	Bridge Dk. Scarification 3/8"	Sq. Yd.	9,035		
Z0012193	Bridge Dk. Thin Poly. Ovrly, 3/8	Sq. Yd.	9,035		
Z0012754	Str Rep Conc DP =< 5"	Sq. Ft.	250		
Z0016001	Deck Slab Repair (FD-T1)	Sq. Yd.	100		
				Bidder's Total Proposal	

ADDENDUM

1. Each pay item should have a unit price and a total price.
2. If no total price is shown or if there is a discrepancy between the product of the unit price multiplied by the quantity, the unit price shall govern.
3. If a unit price is omitted, the total price will be divided by the quantity in order to establish a unit price.
4. A bid may be declared unacceptable if neither a unit price or total price is shown.

Note: Instructions should not be included when the form is submit.

This form is used when a Local Public Agency desires to solicit bids for a project.

This form shall be included in all formal contract proposals for bidding purposes. This includes both maintenance and construction projects. Refer to Chapter 12 of the Bureau of Local Roads and Streets Manual for more information. Specifications must be included in the proposal packet, along with plans. For signature requirements refer to Chapter 2, Section 3.05(b) of the BLRS Manual.

Proposal Submitted By:

Contractor's Name (to be completed by Bidder)	Contractor will insert their name when submitting a proposal packet for bid.
Contractor's Address (to be completed by Bidder)	Contractor will insert legal address when submitting a proposal packet for bid.
Local Public Agency	Insert the name of the Local Public Agency (LPA) soliciting bids for the project.
County	Insert the name of the County in which the LPA is located.
Section Number	Insert the section number assigned to this project without dashes.
Route(s) (Street/Road Name)	Insert the name of the street or route on which the project is located. For projects that include several streets or routes, insert various.

Schedule for Multiple Bids

Combination Letter	Insert the letter identifying the combination bids.
Schedule Included in Combinations	Insert the schedules of the bids included in the combination.
Total	Insert the total amount of the combination bid for the sections listed to the left.
Button Functionality 	Use the Add Row (+) and/or Remove Row (-) buttons located at the beginning of each line/row to either add a row directly below the row that the Add (+) button is clicked on or remove the actual row that the Remove (-) button is clicked on.

Schedule for Single Bid

Item No.	Insert the item number of the item being bid.
Item(s)	Insert the name of the item being bid.
Delivery	Insert the delivery type for the item listed to the left.
Unit	Insert the unit of measure for the item listed to the left.
Quantity	Insert the quantity for the item listed to the left.
Unit Price	The bidder shall insert the unit price for the item listed to the left.
Total	The bidder shall insert the total, which is quantity times the unit price. If the form is being filled out electronically, this field will automatically calculate the total.
Button Functionality 	Use the Add Row (+) and/or Remove Row (-) buttons located at the beginning of each line/row to either add a row directly below the row that the Add (+) button is clicked on or remove the actual row that the Remove (-) button is clicked on.
Bidder's Total Proposal	If completing electronically, this will be automatically completed. If completing by hand, insert the sum of all items above.

Distribution

This form is to be inserted into a formal contract proposal, distribution will be the same as the proposal. When the bidder submits their bid, this form must be completed and included.

ADDENDUM

BDE SPECIAL PROVISIONS
For the July 31 and September 18, 2026 Lettings

The following special provisions indicated by a “check mark” are applicable to this contract and will be included by the Project Coordination and Implementation Section of the Bureau of Design & Environment (BDE).

	File Name	#		Special Provision Title	Effective	Revised
	80099	1	☐	Accessible Pedestrian Signals (APS)	April 1, 2003	Jan. 1, 2022
	80274	2	☐	Aggregate Subgrade Improvement	April 1, 2012	April 1, 2022
	80192	3	☐	Automated Flagger Assistance Devices	Jan. 1, 2008	April 1, 2023
	80173	4	☐	Bituminous Materials Cost Adjustments	Nov. 2, 2006	Aug. 1, 2017
	80426	5	☐	Bituminous Surface Treatment with Fog Seal	Jan. 1, 2020	April 1, 2026
	80475	6	☐	Bridge Deck Concrete Overlays	Jan. 1, 2026	
*	80241	7	☐	Bridge Demolition Debris	July 1, 2009	
*	5053I	8	☐	Building Removal	Sept. 1, 1990	Aug. 1, 2022
*	5026I	9	☐	Building Removal with Asbestos Abatement	Sept. 1, 1990	Aug. 1, 2022
	80460	10	☑	Cement, Finely Divided Minerals, Admixtures, Concrete, and Mortar	Jan. 1, 2025	Jan. 1, 2026
	80384	11	☑	Compensable Delay Costs	June 2, 2017	April 1, 2019
*	80198	12	☐	Completion Date (via calendar days)	April 1, 2008	
*	80199	13	☐	Completion Date (via calendar days) Plus Working Days	April 1, 2008	
	80461	14	☐	Concrete Barrier	Jan. 1, 2025	
	80453	15	☐	Concrete Sealer	Nov. 1, 2023	
	80261	16	☑	Construction Air Quality – Diesel Retrofit	June 1, 2010	Jan. 1, 2025
	80476	17	☐	Deck Slab Repair	Jan. 1, 2026	
*	80029	18	☐	Disadvantaged Business Enterprise Participation	Sept. 1, 2000	Jan. 2, 2025
	80467	19	☐	Erosion Control Blanket	Aug. 1, 2025	
	80229	20	☐	Fuel Cost Adjustment	April 1, 2009	Aug. 1, 2017
	80452	21	☐	Full Lane Sealant Waterproofing System	Nov. 1, 2023	
	80433	22	☐	Green Preformed Thermoplastic Pavement Markings	Jan. 1, 2021	Jan. 1, 2022
	80471	23	☐	Guardrail	Nov. 1, 2025	
	80472	24	☐	High Friction Surface Treatment	Nov. 1, 2025	
	80456	25	☐	Hot-Mix Asphalt	Jan. 1, 2024	April 1, 2026
	80446	26	☐	Hot-Mix Asphalt - Longitudinal Joint Sealant	Nov. 1, 2022	Aug. 1, 2023
	80438	27	☐	Illinois Works Apprenticeship Initiative – State Funded Contracts	June 2, 2021	April 2, 2024
	80483	28	☐	Inlet Filters	April 1, 2026	
	80477	29	☐	Longitudinal Tining	Jan. 1, 2026	July 1, 2026
	80450	30	☐	Mechanically Stabilized Earth Retaining Walls	Aug. 1, 2023	Aug. 1, 2025
	80478	31	☐	Modified Longitudinal Construction Joint	Jan. 1, 2026	
	80464	32	☐	Pavement Marking	April. 1, 2025	Nov. 1, 2025
	80468	33	☐	Pavement Patching	Aug. 1, 2025	
	80441	34	☐	Performance Graded Asphalt Binder	Jan. 1, 2023	
	80459	35	☐	Preformed Plastic Pavement Marking	June 2, 2024	
*	3426I	36	☐	Railroad Protective Liability Insurance	Dec. 1, 1986	Jan. 1, 2022
	80473	37	☐	Raised Reflective Pavement Markers	Nov. 1, 2025	
	80455	38	☑	Removal and Disposal of Regulated Substances	Jan. 1, 2024	April 1, 2026
	80474	39	☐	Residential Driveway Temporary Signal	Nov. 1, 2025	
	80445	40	☐	Seeding	Nov. 1, 2022	July 1, 2026
	80457	41	☐	Short Term and Temporary Pavement Markings	April 1, 2024	April 2, 2024
	80462	42	☐	Sign Panels and Appurtenances	Jan. 1, 2025	Jan. 1, 2026
	80479	43	☐	Sinusoidal Rumble Strips	Jan. 1, 2026	
	80469	44	☐	Slope Wall	Aug. 1, 2025	
	80448	45	☐	Source of Supply and Quality Requirements	Jan. 2, 2023	Jan. 1, 2026
	80340	46	☐	Speed Display Trailer	April 2, 2014	Jan. 1, 2022
	80127	47	☐	Steel Cost Adjustment	April 2, 2004	Nov. 1, 2025
	80480	48	☑	Structural Repair of Concrete	Jan. 1, 2026	
	80397	49	☐	Subcontractor and DBE Payment Reporting	April 2, 2018	
	80391	50	☐	Subcontractor Mobilization Payments	Nov. 2, 2017	April 1, 2019
	80463	51	☐	Submission of Bidders List Information	Jan. 2, 2025	Mar. 2, 2025

ADDENDUM

	80482	52	☐	Submission of Payroll Records – Federal Aid Contract	April 1, 2026	
	80437	53	☐	Submission of Payroll Records – State Contract	April 1, 2021	April 1, 2026
	80435	54	☐	Surface Testing of Pavements – IRI	Jan. 1, 2021	Jan. 1, 2023
	80465	55	☐	Surveying Services	April 1, 2025	
	80481	56	☐	Temporary Concrete Barrier	Jan. 1, 2026	
	80466	57	☐	Temporary Rumble Strips	April 1, 2025	
	80484	58	☐	Tolerance in Thickness for Continuously Reinforced PCC Pavement	July 1, 2026	
	80470	59	☐	Traffic Signal Backplate	Aug. 1, 2025	
*	20338	60	☐	Training Special Provisions	Oct. 15, 1975	Sept. 2, 2021
	80429	61	☐	Ultra-Thin Bonded Wearing Course	April 1, 2020	Jan. 1, 2022
	80439	62	☑	Vehicle and Equipment Warning Lights	Nov. 1, 2021	Nov. 1, 2022
	80458	63	☐	Waterproofing Membrane System	Aug. 1, 2024	
	80302	64	☐	Weekly DBE Trucking Reports	June 2, 2012	Jan. 2, 2025
	80454	65	☐	Wood Sign Support	Nov. 1, 2023	
	80427	66	☑	Work Zone Traffic Control Devices	Mar. 2, 2020	Jan. 1, 2026
	80485	67	☐	Work Zone Width Restriction	July 1, 2026	
*	80071	68	☐	Working Days	Jan. 1, 2002	

Highlighted items indicate a new or revised special provision for the letting.

An * indicates the special provision requires additional information from the designer, which needs to be submitted separately. The Project Coordination and Implementation Section will then include the information in the applicable special provision.

The following special provisions are in the 2026 Supplemental Specifications and Recurring Special Provisions.

File Name	Special Provision Title	New Location(s)	Effective	Revised
80447	Grading and Shaping Ditches	Articles 214.03 & 214.04	Jan. 1, 2023	

ADDENDUM

STRUCTURAL REPAIR OF CONCRETE (BDE)

Effective: January 1, 2026

Add the following Section 532 to the Standard Specifications:

"**SECTION 532. STRUCTURAL REPAIR OF CONCRETE**

532.01 Description. This work shall consist of repairing concrete on a bridge substructure, culvert, retaining wall, or other structure.

532.02 Materials. Materials shall be according to the following.

Item	Article/Section
(a) Portland Cement Concrete (Note 1)	1020
(b) R1, R2, or R3 Concrete	1018
(c) Packaged, Dry, Combined Materials for Concrete	1017.02, 1017.03
(d) High Performance Shotcrete	1015
(e) Reinforcement Bars	1006.10
(f) Anchor Bolts	1006.09
(g) Water	1002
(h) Curing Compound	1022.01
(i) Cotton Mats	1022.02
(j) Protective Coat	1023
(k) Epoxy (Note 2)	1025
(l) Mechanical Bar Splicers	508.06(c)
(m) Polymer Modified Portland Cement Mortar (Note 3)	

Note 1. The concrete shall be Class SI, except the cement and finely divided minerals shall be a minimum 6.65 cwt/cu yd (395 kg/cu m) with no reductions permitted, the cement shall not be below 4.70 cwt/cu yd (279 kg/cu m), the coarse aggregate shall be a CA 16, the strength shall be a minimum 4000 psi (27,500 kPa) at 28 days, and the slump shall be 5-10 in. (125-250 mm). A self-consolidating concrete mixture will also permitted. Slump flow range, visual stability index, J-Ring, L-Box, and hardened visual stability index requirements shall be according to Article 1020.04.

Note 2. ASTM C 881, Type IV, Grade 2 or 3, Class A, B, or C may also be used.

Note 3. Polymer modified portland cement mortar shall be a packaged product consisting of cementitious materials, fine aggregate, and a polymer modifier; and shall have successfully completed and remain current with the AASHTO Product Eval and Audit Rapid Hardening Concrete Patching Materials (RHCP) testing program. The mortar shall be a workable mix capable of bonding and holding its own plastic weight when mixed and placed according to manufacturer's instructions on vertical and overhead surfaces. It shall have a minimum compressive strength of 1,500 psi (10,300 kPa) at 24 hours, 4,000 psi (27,500 kPa) at 7 days, and 5,000 psi (34,500 kPa) at 28 days when tested according to

ADDENDUM

ASTM C 109 or AASHTO T 106. In addition, the mortar shall have a minimum bond strength of 1,500 psi (10,300 kPa) at 7 days when tested according to ASTM C 882. For prestressed concrete applications, the mortar shall have a water-soluble chloride ion content of less than 0.06 percent by weight of cementitious material when tested according to ASTM C 1218 or AASHTO T 260; and for non-prestressed concrete applications, the water-soluble chloride ion content shall be less than 0.15 percent by weight of cementitious material. The Department will maintain a Qualified Product List of Polymer Modified Portland Cement Mortar.

532.03 Equipment. Equipment shall be according to Article 503.03 and the following.

Item	Article/Section
(a) Hydrodemolition Equipment	1101.11
(b) High Performance Shotcrete Equipment (Note1)	

Note 1. The batching, mixing, pumping, hose, nozzle, and auxiliary equipment shall be for the wet-mix shotcrete method and meet the requirements of ACI 506R.

CONSTRUCTION REQUIREMENTS

532.04 General. The repair method shall be either formed concrete repair or shotcrete according to the following.

(a) Formed Concrete Repair. For formed concrete repair, a subsequent patch to repair the placement point after initial concrete placement will not be allowed. As an example, this may occur in a vertical location located at the top of the repair.

Formed concrete repair shall not be used for overhead applications except as noted for polymer modified portland cement mortar.

Polymer modified portland cement mortar shall only be used for repairs between 3/8 in. (10 mm) and 2 in. (50 mm) deep on horizontal, vertical, and overhead surfaces.

(b) Shotcrete. Shotcrete shall not be used for any repair greater than 6 in. (150 mm) in depth, except in horizontal applications where the shotcrete may be placed from above in one lift.

Shotcrete shall not be used for column repairs greater than 4 in. (100 mm) in depth, unless the shotcrete mixture contains 3/8 in. (9.5 mm) aggregate.

The Contractor shall provide a current copy of ACI 506R to the Engineer a minimum of one week prior to the start of construction.

The shotcrete personnel who perform the work shall have current American Concrete Institute (ACI) nozzlemen certification for vertical wet and overhead wet applications,

ADDENDUM

except one individual may be in training. This individual shall be adequately supervised by a certified ACI nozzlemen as determined by the Engineer and a copy of the nozzlemen certificate(s) provided to the Engineer.

532.05 Temporary Shoring or Cribbing. When a temporary shoring or cribbing support system is required, the Contractor shall provide details and computations, prepared and sealed by an Illinois Licensed Structural Engineer, to the Department for approval. Whenever possible, the support system shall be installed prior to starting the associated concrete removal. If no system is specified, but during the course of removal the need for temporary shoring or cribbing becomes apparent or is directed by the Engineer due to a structural concern, the Contractor shall not proceed with any further removal work until an approved support system is installed.

532.06 Concrete Removal. The Contractor shall provide ladders or other appropriate equipment for the Engineer to mark the removal areas. Repair configurations will be kept simple, and squared corners will be indicated whenever possible. The repair perimeter shall be sawed a depth of 1/2 in. (13 mm) or less, as required to avoid cutting the reinforcement. If the concrete is broken or removed beyond the limits of the initial saw cut, the new repair perimeter shall be recut. The areas to be repaired shall have all loose, unsound concrete removed completely by the use of hydrodemolition equipment or chipping hammer with a 15 lb. (7 kg) maximum class. The concrete removal shall extend along the reinforcement bar until the reinforcement is free of bond inhibiting corrosion. Reinforcement bars with 50 percent or more exposed area shall be undercut to a depth of 3/4 in. (19 mm) or the diameter of the reinforcement bar, whichever is greater.

The minimum repair depth shall be 1 in. (25 mm). The substrate profile shall be ± 1/16 in. (± 1.5 mm). The perimeter of the repair area shall have a vertical face.

If sound concrete is encountered before existing reinforcement bars are exposed, further removal of concrete shall not be performed unless the minimum repair depth is not met.

If a repair is located at the ground line, any excavation required below the ground line to complete the repair shall be included in this work.

Once concrete removal has started, the Contractor shall have 14 calendar days to complete each repair location.

The Engineer shall be notified of concrete removal that exceeds 6 in. (150 mm) in depth, one fourth the cross section of a structural member, more than half the vertical column reinforcement is exposed in a cross section, more than six consecutive reinforcement bars are exposed in any direction, within 1.5 in. (38 mm) of a bearing area, or other structural concern. Excessive deterioration or removal may require further evaluation of the structure or installation of temporary shoring and cribbing support system.

532.07 Surface Preparation. Prior to placing the concrete or shotcrete, the Contractor shall blast clean the repair area and exposed reinforcement to provide a surface that is free of oil, dirt, and loose material.

ADDENDUM

The repair area and perimeter vertical face shall have a rough surface. Just prior to concrete or shotcrete placement, the repair area shall be saturated with water to a saturated surface-dry condition. Any standing water shall be removed.

If a succeeding layer of shotcrete is to be applied, the initial shotcrete surface and remaining exposed reinforcement shall be free of curing compound, oil, dirt, loose material, rebound, and overspray. Preparation may be by lightly brushing or blast cleaning if the previous shotcrete surface was less than 36 hours prior. If more than 36 hours prior, the surface shall be prepared by blast cleaning.

532.08 Reinforcement. Exposed reinforcement bars shall be cleaned of concrete and corrosion by blast cleaning. After cleaning, exposed reinforcement will be evaluated to determine if replacement or additional reinforcement bars are required.

Reinforcing bars that have been cut or have lost 25 percent or more of their original cross-sectional area shall be supplemented by new in kind reinforcement bars. New bars shall be lapped a minimum of 32 bar diameters to existing bars. A mechanical bar splicer shall be used when it is not feasible to provide the minimum bar lap. No welding of bars will be permitted.

Intersecting reinforcement bars shall be tightly secured to each other using 0.006 in. (0.15 mm) or heavier gauge tie wire and shall be adequately supported to minimize movement during concrete placement or application of shotcrete.

Where the depth of concrete removal is greater than 8 in. (205 mm) and there is no existing reinforcement extending into the repair area, the Contractor shall anchor the new concrete to the existing concrete with 3/4 in. (19 mm) diameter hook bolts spaced at 15 in. (380 mm) maximum centers both vertically and horizontally, and a minimum of 12 in. (305 mm) away from the perimeter of the repair according to Section 584.

532.09 Repair Methods. Within 3 calendar days of the surface preparation and after the repair areas are approved by the Engineer, the concrete or shotcrete shall be placed according to the following.

(a) Formed Concrete Repair. Falsework and forms shall be according to Articles 503.05 and Article 503.06. Formwork shall provide a smooth and uniform concrete finish and shall approximately match the existing concrete structure. Air vents may be provided to reduce voids and improve surface appearance. The Contractor may use exterior mechanical vibration, as approved by the Engineer, to release air pockets. The concrete shall be Class SI concrete; packaged R1, R2, or R3 concrete; packaged, dry, combined materials for concrete; or polymer modified portland cement mortar. The concrete shall be placed and consolidated according to Article 503.07.

Curing shall be according to Article 1020.13.

The surfaces of the completed repair shall be finished according to Article 503.15.

ADDENDUM

(b) Shotcrete. In the field, shotcrete shall be tested for air content according to Illinois Modified AASHTO T 152 or AASHTO T 152. The sample shall be obtained from the discharge end of the nozzle by shooting a pile large enough to scoop a representative amount for filling the air meter measuring bowl. Shotcrete shall not be shot directly into the measuring bowl for testing.

Compressive strength shall be according to ASTM C 1140, except the test panel shall be cured according to Article 1020.13(a)(3) or (5) while stored at the jobsite and during delivery to the laboratory. At the discretion of the Engineer, the test panel may be reduced to 18x18x3.5 in. (457x457x89 mm).

The method of alignment control (i.e., ground wires, guide strips, depth gages, depth probes, and formwork) to ensure the specified shotcrete thickness and reinforcing bar cover is obtained shall be according to ACI 506R. Ground wires shall be removed after completion of cutting operations. Guide strips and formwork shall be of dimensions and a configuration that do not prevent proper application of shotcrete. Metal depth gauges shall be cut 1/4 in. (6 mm) below the finished surface. All repaired members shall be restored as close as practicable to their original dimensions.

Air temperature limits according to the first paragraph of Article 1020.14(b) shall apply in cold weather. Shotcrete shall not be applied when the air temperature is greater than 90 °F (32 °C). The applied shotcrete shall have a minimum temperature of 50 °F (10 °C) and a maximum temperature of 90 °F (32 °C). The shotcrete shall not be applied during periods of rain unless protective covers or enclosures are installed. If necessary, lighting shall be provided to provide a clear view of the shooting area.

The shotcrete shall be applied according to ACI 506R and shall be done in a manner that does not result in cold joints, laminations, sandy areas, voids, sags, or separations. In addition, the shotcrete shall be applied in a manner that results in maximum densification of the shotcrete. Shotcrete which is identified as being unacceptable while still plastic shall be removed and re-applied.

The nozzle shall normally be at a distance of 2-5 ft. (0.6-1 m) from the receiving surface and shall be oriented at right angles to the receiving surface. Exceptions to this requirement will be permitted to fill corners, encase large diameter reinforcing bars, or as approved by the Engineer. For any exception, the nozzle shall never be oriented more than 4 degrees from the surface. Care shall be taken to keep the front face of the reinforcement bar clean during shooting operations. Shotcrete shall be built up from behind the reinforcement bar. Accumulations of rebound and overspray shall be continuously removed prior to application of new shotcrete. Rebound material shall not be incorporated in the work.

Whenever possible, shotcrete shall be applied to the full thickness in a single layer. When two or more layers are required, the minimum number shall be used and shall be done in a manner without sagging or separation. A flash coat (i.e. a thin layer of up to 1/4 in. (6 mm) applied shotcrete) may be used as the final lift for overhead applications.

ADDENDUM

Prior to application of a succeeding layer of shotcrete, the initial layer of shotcrete shall be prepared according to the surface preparation and reinforcement bar cleaning requirements. Upon completion of the surface preparation and reinforcement bar treatment, water shall be applied according to the surface preparation requirements unless the surface is moist. The second layer of shotcrete shall then be applied within 30 minutes.

Shotcrete shall be cut back to line and grade using trowels, cutting rods, screeds or other suitable devices. The shotcrete shall be allowed to stiffen sufficiently before cutting. For depressions, cut material may be used for small areas. Rebound material shall not be incorporated in the work. For the final finish, a wood float or a manufacturer approved finishing aid shall be used to approximately match the existing concrete texture.

Contractor operations for curing shall be continuous with shotcrete placement and finishing operations. Curing shall be accomplished using wetted cotton mats, membrane curing, or a combination of both. Cotton mats shall be applied according to Article 1020.13(a)(5), except the exposed layer of shotcrete shall be covered within 10 minutes after finishing and wet curing shall begin immediately. Curing compound shall be applied according to Article 1020.13(a)(4), except the curing compound shall be applied as soon as the shotcrete has hardened sufficiently to prevent marring the surface, and each of the two separate applications shall be applied in opposite directions to ensure coverage. Note 5 of the Index Table in Article 1020.13 shall also apply.

When a shotcrete layer is to be covered by a succeeding shotcrete layer within 36 hours, the repair area shall be protected by wet curing with either burlap or cotton mats until the succeeding layer is applied. Intermittent hand fogging may be used for the first hour and a half if wet curing with mats begins within 10 minutes after fogging has ceased.

The curing period shall be for 7 days, except when there is a succeeding layer of shotcrete. In this instance, the initial shotcrete layer shall be cured until the surface preparation and reinforcement bar treatment is started.

The concrete or shotcrete shall not be placed when frost is present on the surface of the repair area, or the surface temperature of the repair area is less than 40 °F (4 °C). All repaired members shall be restored as close as practicable to their original dimensions.

If temperatures below 45 °F (7 °C) are forecast during the curing period, Protection Method I according to Article 1020.13(d)(1) or Protection Method II according to Article 1020.13(d)(2) shall be used.

532.10 Protective Coat. Protective coat shall be applied to the completed repair at reinforcement bar locations with less than 3/4 in. (19 mm) of cover according to Article 503.19, except blast cleaning shall be performed to remove curing compound.

ADDENDUM

BRIDGE DECK THIN POLYMER OVERLAY 18

WASHOUT BASIN 23

CONTRACTORS DAILY NOTIFICATION 25

BARRICADES, TYPE II (SPECIAL) 25

PROGRESS SCHEDULE 25

REMOVE EXISTING SIGNS 25

DECK SLAB REPAIR (FULL DEPTH, TYPE I) 25

IDOT DISTRICT ONE CHECKLIST:

Index For Supplemental Specifications And Recurring Special Provisions
Check Sheet for Recurring Special Provisions
Check Sheet for Recurring Local Roads And Streets Special Provisions

BDE SPECIAL PROVISIONS:

BDE Special Provision Checklist
Construction Air Quality – Diesel Retrofit
Vehicle and Equipment Warning Lights
Work Zone Traffic Control Devices

BLR SPECIAL PROVISIONS:

LR 109-3 – Fuel Cost Adjustment
LR 109-4 – Steel Cost Adjustment
LR 702 – Construction and Maintenance Signs

CONTRACT DOCUMENTS:

BLR 12230 Local Public Agency Proposal Bid Bond
BLR 12325 Apprenticeship or Training Program Certification
BLR 12326 Affidavit of Illinois Business Office
BC 57 Affidavit of Availability
BC 261 Substance Abuse Prevention Program Certification

ADDITIONAL INFORMATION:

IDOT Highway Standards

ADDENDUM

CONTRACTORS DAILY NOTIFICATION
Revised: 03/15/2023

The Contractor shall notify the Engineer and /or his designated representative prior to the beginning of each day's work as to the location and type of work that is scheduled to be performed that day. The Contractor's notification shall be ***at least 48 hours prior*** to the day of actual work.

BARRICADES, TYPE II (SPECIAL)
Revised: 5/6/2025

When construction operations result in a temporary drop-off at the edge of pavement of three inches or greater, Type II Barricades (see standard 701901) shall be erected next to the edge of the pavement. At all times these barricades shall be restrained by a minimum of *two weighted sandbags*, one across each bottom rail. Barricades shall be placed at a maximum spacing of 100 feet or as directed by the engineer. Barricades shall remain in place until the aggregate shoulder is placed next to the lane edge. To ensure that barricades are placed for the shortest duration possible, the shoulder placement operation shall be completed within 2 working days after completion of the HMA Surface Course. Adverse weather and/or high winds may require additional sand bagging for all barricades.

The locations and limits for the Type II Barricades on all roads shall be as directed by the engineer. At Curb and Gutter Removal and Replacement locations, or where as directed by the Engineer, 54-inch tall Type II Barricades shall be provided in order to meet the required 36-inch reflective height standard above the top of roadway surface elevation.

Barrels will only be allowed at locations previously approved by the Engineer.

Traffic Control Devices will only be paid for when they are actively used as part of Traffic Control and Protection of this contract.

Type A Flashing Lights shall be provided in accordance with Section 701.16 of the IDOT Standard Specifications and as specified herein, unless otherwise directed by the Engineer.

Basis of Payment: This work shall be included in the contract lump sum price for TRAFFIC CONTROL AND PROTECTION (SPECIAL), which price shall include all labor, material, and equipment necessary to complete the work described above.

PROGRESS SCHEDULE
Time is of the essence in this Contract. It may be necessary for the Contractor to work longer hours or use additional crews in order to complete the work within the required time limits. The Contractor shall submit a bar graph progress schedule for the Engineer's approval before the work can be started.

The schedule shall be based on an anticipated start date and for the project completion date as identified in the special provision for "START AND COMPLETION DATE".

REMOVE EXISTING SIGNS
The Contractor shall remove or cover, and reinstall at the end of the work any signs that conflict or interfere with the work. This shall be considered included in the cost of work being performed.

DECK SLAB REPAIR (FULL DEPTH, TYPE I)
Effective: May 15, 1995
Revised: February 2, 2024

ADDENDUM

This work shall consist of hot-mix asphalt surface removal, when required, the removal and disposal of all loose and deteriorated concrete from bridge deck and the replacement with new concrete to the original top of deck. The work shall be done according to the applicable requirements of Sections 501, 503 and 1020 of the Standard Specifications and this Special Provision.

Deck slab repairs will be classified as follows:

(a) Partial-Depth. Partial-depth repairs shall consist of removing the loose and unsound deck concrete, disposing of the concrete removed and replacing with new concrete. The removal may be performed by chipping with power driven hand tools or by hydroscarification equipment. The depth shall be measured from the top of the concrete deck surface, at least 3/4 in. (20 mm) but not more than 1/2 the concrete deck thickness.

(b) Full-Depth. Full-depth repairs shall consist of removing concrete full-depth of the deck, disposing of the concrete removed, and replacing with new concrete to the original concrete deck surface. The removal may be performed with power driven hand tools, hydraulic impact equipment, or by hydro-scarification equipment. Full-depth repairs shall be classified for payment as Full-Depth, Type I and Full-Depth, Type II according to the following:

Type I	Full-depth patches less than or equal to 5 sq. ft. (0.5 sq m) in area. The minimum dimensions for a patch shall be 1 ft. x 1 ft. (300 mm x 300 mm).
Type II	Full-depth patches greater than 5 sq. ft. (0.5 sq. m) in area.

Materials.

Materials shall be according to Article 1020.02.

Portland cement concrete for partial and full-depth repairs shall be according to Section 1020. Class PP-1, PP-2, PP-3, PP-4, PP-5 or BS concrete shall be used at the Contractor's option unless noted otherwise on the contract plans.

Equipment: The equipment used shall be subject to the approval of the Engineer and shall meet the following requirements:

(a) Surface Preparation Equipment. Surface preparation and concrete removal equipment shall be according to the applicable portions of Section 1100 and the following:

(1) Sawing Equipment. Sawing equipment shall be a concrete saw capable of sawing concrete to the specified depth.

(2) Blast Cleaning Equipment. The blast cleaning may be performed by wet sandblasting, high-pressure waterblasting, shotblasting or abrasive blasting. Blast cleaning equipment shall be capable of removing rust and old concrete from exposed reinforcement bars, and shall have oil traps.

(3) Power-Driven Hand Tools. Power-driven hand tools will be permitted including jackhammers less than or equal to the nominal 45 lb. (20 kg) class. Chipping hammers heavier than a nominal 15 lb. (6.8 kg) class shall not be used for removing concrete from below any reinforcing bar for partial depth repairs, or for removal within 1 ft (300 mm) of existing beams, girders or other supporting structural members that are to remain in service or within 1 ft (300 mm) of the boundaries of full-depth repairs. Jackhammers or

ADDENDUM

chipping hammers shall not be operated at an angle in excess of 45 degrees measured from the surface of the slab.

(4) Hydraulic Impact Equipment. Hydraulic impact equipment with a maximum rated striking energy of 360 ft-lbs (270 J) may be permitted only in areas of full depth removal more than 1 ft (300 mm) away from existing beams, girders or other supporting structural members that are to remain in service or more than 1 ft (300 mm) from the boundaries of full-depth repairs.

(5) Hydro-Demolition Equipment. The hydro-demolition equipment shall consist of filtering and pumping units operating with a remote-controlled robotic device. The equipment shall use water according to Section 1002. The equipment shall be capable of being controlled to remove only unsound concrete.

(b) Concrete Equipment: Equipment for proportioning and mixing the concrete shall be according to Article 1020.03.

(c) Finishing Equipment: Finishing equipment shall be according to Article 1103.17. Adequate hand tools will be permitted for placing and consolidating concrete in the patch areas and for finishing small patches.

Construction Requirements: Sidewalks, curbs, drains, reinforcement and/or existing transverse and longitudinal joints which are to remain in place shall be protected from damage during removal and cleaning operations.

The Contractor shall control the runoff water generated by the various construction activities in such a manner as to minimize, to the maximum extent practicable, the discharge of untreated effluent into adjacent waters, and shall properly dispose of the solids generated according to Article 202.03. The Contractor shall submit a water management plan to the Engineer specifying the control measures to be used. The control measures shall be in place prior to the start of runoff water generating activities. Runoff water shall not be allowed to constitute a hazard to adjacent or underlying roadways, waterways, drainage areas or railroads nor be allowed to erode existing slopes.

(a) Hot-Mix Asphalt Surface Removal. The hot-mix asphalt surface course and all waterproofing membrane shall be removed and disposed of according to applicable portions of Articles 440.04 and 440.06, except milling equipment will not be allowed if the deck is to receive a waterproofing membrane system. If the overlay or waterproofing membrane contains asbestos fibers, removal shall be in accordance with the Special Provision for "Asbestos Waterproofing Membrane or Asbestos Hot-mix Asphalt Surface Removal". Removal of the hot-mix asphalt surface by the use of radiant or direct heat will not be permitted.

(b) Surface Preparation: All loose, disintegrated and unsound concrete shall be removed from portions of the deck slab shown on the plans or as designated by the Engineer. The Engineer will determine the limits of removal as the work progresses. The Contractor shall take care not to damage reinforcement bars or expansion joints which are to remain in place. Any damage to reinforcement bars or expansion joints shall be corrected at the Contractor's expense. All loose reinforcement bars, as determined by the Engineer, shall be retied at the Contractor's expense.

(1) Partial-Depth. Areas to be repaired will be determined and marked by the Engineer. A concrete saw shall be used to provide vertical edges approximately 3/4 in. (20 mm) deep around the perimeter of the area to be patched when a concrete overlay is not specified.

ADDENDUM

Where high steel is present, the depth may be reduced as directed by the Engineer. A saw cut will not be required on those boundaries along the face of the curb, parapet or joint or when sharp vertical edges are provided by hydro-demolition. The loose and unsound concrete shall be removed by chipping, with power driven hand tools or by hydro-demolition equipment. All exposed reinforcing bars and newly exposed concrete shall be thoroughly blast cleaned. Where, in the judgment of the Engineer, the bond between existing concrete and reinforcement steel within the patch area has been destroyed, the concrete adjacent to the bar shall be removed to a depth that will permit new concrete to bond to the entire periphery of the exposed bar. A minimum of 1 in. (25 mm) clearance will be required. The Engineer may require enlarging a designated removal area should inspection indicate deterioration beyond the limits previously designated. In this event, a new saw cut shall be made around the extended area before additional removal is begun. The removal area shall not be enlarged solely to correct debonded reinforcement or deficient lap lengths.

(2) Full-Depth. Concrete shall be removed as determined by the Engineer within all areas designated for full-depth repair and in all designated areas of partial depth repair in which unsound concrete is found to extend below half the concrete deck thickness. Full depth removal shall be performed according to Article 501.05 except that hydraulic impact equipment may be permitted in areas of full depth removal more than 1 ft (300 mm) away from the edges of existing beams, girders or other supporting structural members or more than 1 ft (300 mm) from the boundaries of full-depth repairs. Saw cuts shall be made on the top of the deck, except those boundaries along the face of curbs, parapets and joints or where hydro-demolition provided sharp vertical edges. The top saw cut may be omitted if the deck is to receive an overlay. Forms for full-depth repair may be supported by hangers with adjustable bolts or by blocking from the beams below. When approved by the Engineer, forms for Type 1 patches may be supported by No. 9 wires or other devices attached to the reinforcement bars. All form work shall be removed after the curing sequence is complete and prior to opening to traffic.

(3) Reinforcement Treatment. Care shall be exercised during concrete removal to protect the reinforcement bars and structural steel from damage. Any damage to the reinforcement bars or structural steel to remain in place shall be repaired or replaced. All existing reinforcement bars shall remain in place except as herein provided for corroded bars. Tying of loose bars will be required. Reinforcing bars which have been cut or have lost 25 percent or more of their original cross sectional area shall be supplemented by new in kind reinforcement bars. New bars shall be lapped a minimum of 32 bar diameters to existing bars. An approved mechanical bar splice capable of developing in tension at least 125 percent of the yield strength of the existing bar shall be used when it is not feasible to provide the minimum bar lap. No welding of bars will be permitted.

(4) Cleaning. Immediately after completion of the concrete removal and reinforcement repairs, the repair areas shall be cleaned of dust and debris. Once the initial cleaning is completed, the repair areas shall be thoroughly blast cleaned to a roughened appearance free from all foreign matter. Particular attention shall be given to removal of concrete fines. Any method of cleaning which does not consistently produce satisfactory results shall be discontinued and replaced by an acceptable method. All debris, including water, resulting from the blast cleaning shall be confined and shall be immediately and thoroughly removed from all areas of accumulation. If concrete placement does not follow

ADDENDUM

immediately after the final cleaning, the area shall be carefully protected with well-anchored polyethylene sheeting. Exposed reinforcement bars shall be free of dirt, detrimental scale, paint, oil, or other foreign substances which may reduce bond with the concrete. A tight non-scaling coating of rust is not considered objectionable. Loose, scaling rust shall be removed by rubbing with burlap, wire brushing, blast cleaning or other methods approved by the Engineer.

(c) Placement & Finishing of Concrete Repair:

(1) Bonding Method. The patch area shall be cleaned to the satisfaction of the Engineer and shall be thoroughly wetted and maintained in a dampened condition with water for at least 12 hours before placement of the concrete. Any excess water shall be removed by compressed air or by vacuuming prior to the beginning of concrete placement. Water shall not be applied to the patch surface within one hour before or at any time during placement of the concrete.

(2) Concrete Placement. The concrete shall be placed and consolidated according to Article 503.07 and as herein specified. Article 1020.14 shall apply. When an overlay system is not specified, the patches shall be finished according to Article 503.16 (a), followed by a light brooming.

(d) Curing and Protection. Concrete patches shall be cured by the Wetted Burlap or Wetted Cotton Mat Method according to Article 1020.13 (a)(3) or Article 1020.13 (a)(5). The curing period shall be 3 days for Class PP-1, PP-2, PP-3, PP-4, and PP-5 concrete. The curing period shall be 7 days for Class BS concrete. In addition to Article 1020.13, when the air temperature is less than 55º F (13º C), the Contractor shall cover the patch according to Article 1020.13 (d)(1) with minimum R12 insulation. Insulation is optional when the air temperature is 55º F. - 90º F (13º C - 32º C). Insulation shall not be placed when the air temperature is greater than 90° F (32° C). A 72-hour minimum drying period shall be required before placing waterproofing or hot-mix asphalt surfacing.

(e) Opening to Traffic. No traffic will be permitted on a patch until after the specified cure period, and the concrete has obtained a minimum compressive strength of 4000 psi (27.6 MPa) or flexural strength of 675 psi (4.65 MPa). Construction equipment will be permitted on a patch during the cure period if the concrete has obtained the minimum required strength. In this instance, the strength specimens shall be cured with the patch.

Method of Measurement.

When specified, hot-mix asphalt surface removal and full or partial depth repairs will be measured for payment and computed in square yards (square meters).

Basis of Payment.

The hot-mix asphalt surface removal will be paid for at the contract unit price per square yard (square meter) for HOT-MIX ASPHALT SURFACE REMOVAL (DECK). Areas removed and replaced up to and including a depth of half the concrete deck thickness will be paid for at the contract unit price per square yard (square meter) for DECK SLAB REPAIR (PARTIAL). Areas requiring removal greater than a depth of half the concrete deck thickness shall be removed and replaced full depth and will be paid for at the contract unit price per square yard (square meter) for DECK SLAB REPAIR (FULL DEPTH, TYPE I) and/or DECK SLAB REPAIR (FULL DEPTH, TYPE II).

ADDENDUM

When corroded reinforcement bars are encountered in the performance of this work and replacement is required, the Contractor will be paid according to Article 109.04.

No payment will be allowed for removal and replacement of reinforcement bars damaged by the Contractor in the performance of his/her work or for any increases in dimensions needed to provide splices for these replacement bars.

Removal and disposal of asbestos waterproofing and/or asbestos bituminous concrete will be paid for as specified in the Special Provision for “Asbestos Waterproofing Membrane or Asbestos Hot-Mix Asphalt Surface Removal”.

ADDENDUM

532.11 Inspection. After curing but no sooner than 28 days after placement of concrete or shotcrete, the Contractor shall provide ladders or other necessary equipment for the Engineer to inspect the repaired areas.

A repaired area with cracks, voids, or delamination shall be considered as nonconforming. Any of the following shall be cause for removal and replacement of a repaired area.

(a) A single surface crack greater than 0.01 in. (0.25 mm) in width and greater than 12 in. (300 mm) in length.

(b) Two or more surface cracks greater than 0.01 in. (0.25 mm) in width that total greater than 24 in. (600 mm) in length.

(c) Map cracking in one or more regions totaling 15 percent or more of the gross surface area of the repair.

(d) Two or more surface voids with least dimension of 3/4 in. (19 mm) each.

(e) A repaired area not within 1/4 in. (6 mm) of the original dimensions.

Cracks greater than 0.007 in. (0.2 mm) in width shall be repaired with epoxy according to Section 590. For cracks less than or equal to 0.007 in. (0.2 mm) in width, the epoxy shall be applied to the surface of the crack as determined by the Engineer. Voids shall be repaired according to Article 503.15.

532.12 Method of Measurement. This work will be measured for payment in place and the area computed in square feet (square meters). For a repair at a corner, both sides will be measured.

532.13 Basis of Payment. This work will be paid for at the contract unit price per square foot (square meter) for STRUCTURAL REPAIR OF CONCRETE (DEPTH GREATER THAN 5 INCHES or STRUCTURAL REPAIR OF CONCRETE (DEPTH EQUAL TO OR LESS THAN 5 INCHES.

Concrete protected according to Article 1020.13(d) will be paid according to Article 503.22.

When not specified to be paid for elsewhere, the work to design, install, and remove the temporary shoring and cribbing will be paid according to Article 109.04.

With the exception of reinforcement damaged by the Contractor, supplemental reinforcement bars, mechanical bar splicers, hook bolts, and protective coat will be paid according to Article 109.04."

80480

ADDENDUM

GENERAL NOTES

All construction shall be done in accordance with the "Standard Specifications for Road and Bridge Construction", January 1, 2022 Edition; The "Illinois Manual on Uniform Traffic Control Devices for Streets and Highways", latest edition; the details in the plans; and the Special Provisions included in the contract documents.

All traffic control and other advisory signs needed for construction are to be furnished by the Contractor in accordance with Article 107.14 of the Standard Specifications.

The Contractor will provide and install two (2) weighted sandbags on each Type I or Type II barricade used. One (1) weighted sandbag shall be installed across each bottom rail. All Type III barricades shall require a minimum of four (4) sandbags per barricade.

The Contractor will be required to comply with all state regulations regarding air, water, and noise pollution. The Contractor is prohibited from burning any material within or adjacent to the improvement.

Saw cutting prior to any removal items noted on the plans or directed by the Engineer shall be considered included in the cost of the item being removed.

The Contractor shall use care in removing items of work. Any damage done to existing items by the Contractor shall be repaired by the Contractor at his expense.

The Contractor shall protect existing utilities as well as existing lighting.

Underground utilities are not shown in the plans. Locations shall be identified and verified by the Contractor.

Plan dimensions and details relative to existing plans are subject to nominal construction variations. The Contractor shall field verify existing dimensions and details affecting new construction and make necessary approved adjustments prior to construction or ordering of materials. Such variations shall not be cause for additional compensation for a change in scope of the work, however, the Contractor will be paid for the quantity actually furnished at the unit price bid for the work.

The Contractor as required, shall obtain all necessary permits prior to commencing with construction.

The Contractor's operations and temporary storage activities shall be limited to the work area and/or construction limits. Any additional staging areas adjacent to the project are subject to prior approval by the Engineer. No additional compensation will be allowed to the Contractor for compliance with the above requirements.

It is the Contractor's responsibility to ascertain existing field conditions prior to bidding on this contract.

LANE CLOSURE

A minimum of one (1) through lane in each direction shall remain open on Randall Road at all times. Temporary traffic lanes shall be a minimum of 12' wide.

A minimum of one (1) through lanes in each direction shall remain open on Randall Road during peak traffic times. Peak traffic is defined as weekdays from 6 a.m. to 9 a.m. and from 3 p.m. to 6 p.m.
Night and/or weekend work will be allowed with appropriate traffic control and written approval from the Engineer.
If the Contractor elects to work at night, they shall provide supplemental lighting in conformance with Nighttime Work Zone Lighting in the Standard Specifications. Cost shall not be paid for separately, but shall be considered included under Traffic Control and Protection, Standard 701421.

Overtime and/or weekend work may be required and should be included in bid and will not be paid for as an extra cost to the contract.

No Lane Closures will be permitted on the following dates:
September 4 through September 7, 2026.

Advanced Lane Closure signs shall be removed or covered when lanes are not closed.

Workers signs shall be placed when workers are present and shall be removed at all other times.

TOTAL BILL OF MATERIALS

	ITEM	UNIT	TOTAL
	Concrete Removal	Cu. Yd.	12.6
	Concrete Superstructure	Cu. Yd.	12.6
	Protective Coat	Sq. Yd.	17.3
	Reinforcement Bars, Epoxy Coated	Pound	1,730
	Bar Splicers	Each	28
	Preformed Joint Strip Seal	Foot	140
	Mobilization	L. Sum	1
	Traffic Control and Protection (Special)	L. Sum	1
	Changeable Message Sign	Cal. Da.	60
	Modified Urethane Pavement Marking - Line 4"	Foot	4,986
	Modified Urethane Pavement Marking - Line 6"	Foot	624
*	Washout Basin	L. Sum	1
*	Bridge Deck Scarification 3/8 Inch	Sq. Yd.	9,035
*	Bridge Deck Thin Polymer Overlay 3/8"	Sq. Yd.	9,035
† *	Structural Repair of Concrete (Depth Equal To Or Less Than 5 Inches)	Sq. Ft.	250
† *	Deck Slab Repair (Full Depth, Type I)	Sq. Yd.	100

* Item requires a Special Provision

† Quantity subject to verification in the field

PROJECT CONTACTS

Kane County Division of Transportation	Ken Mielke	(630) 406-7172
Nicor Gas		(630) 305-9500
ComEd		(630) 424-5704

HIGHWAY STANDARDS

000001-09	Standard Symbols, Abbreviations and Patterns
001006	Decimal of an Inch and of a Foot
701421-08	Lane Closure, Multilane, Day Operations Only, for speeds > 45 MPH to 55 MPH
701901-11	Traffic Control Devices

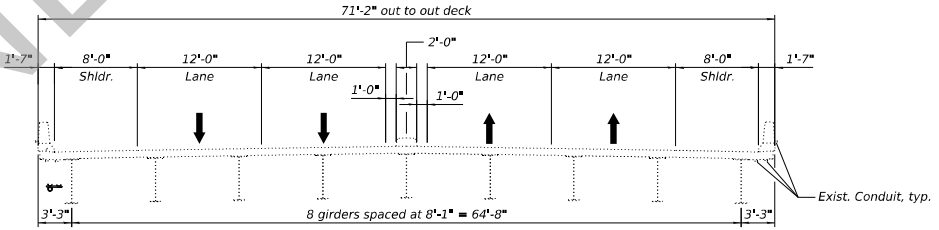

DECK CROSS SECTION (TYPICAL)
(Looking North)

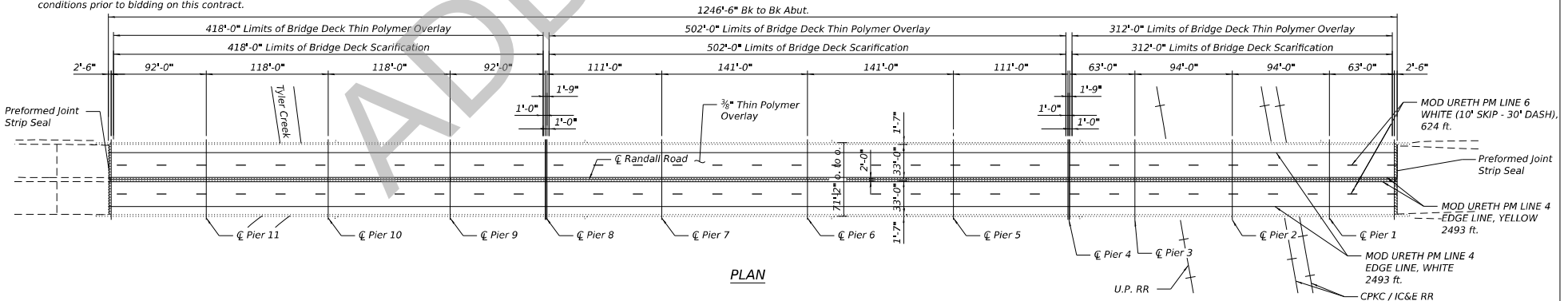

PLAN

ADDENDUM

HRG PROJECT NO.: 002_045-3115_gen01.dgn
HRG PROJ. CONTACT:
FILE NAME: IL_def_bw.sht
PLOT DRIVER: PLOT.TABLE: PEN TABLE:

HRGreen
HRGreen.com
Illinois Professional Design Firm # 184-001322

USER NAME = raul.tejada	DESIGNED - RAT	REVISED -	
	CHECKED - AEU	REVISED -	
PLOT SCALE =	DRAWN - JJH	REVISED -	
PLOT DATE = 8/12/2026	CHECKED - AEU	REVISED -	

KANE COUNTY
DIVISION OF TRANSPORTATION

GENERAL NOTES
HIGHWAY STANDARDS AND BILL OF MATERIALS
SHEET NO. 2 OF 11 SHEETS

F.A.P. RTE.	SECTION	COUNTY	TOTAL SHEETS	SHEET NO.
336	26-00176-06-BR	KANE	11	2
		CONTRACT NO.		
		ILLINOIS	FED. AID PROJECT	

Local Public Agency	County	Section Number	Route(s) (Street/Road Name)
Kane County Division of Transpo	Kane	26-00176-06-BR	Randall Road over UPRR, CPK

CONTRACTOR CERTIFICATIONS

The certifications hereinafter made by the bidder are each a material representation of fact upon which reliance is placed should the Department enter into the contract with the bidder.

1. **Debt Delinquency.** The bidder or contractor or subcontractor, respectively, certifies that it is not delinquent in the payment of any tax administered by the Department of Revenue unless the individual or other entity is contesting, in accordance with the procedure established by the appropriate Revenue Act, its liability for the tax or the amount of the tax. Making a false statement voids the contract and allows the Department to recover all amounts paid to the individual or entity under the contract in a civil action.

2. **Bid-Rigging or Bid Rotating.** The bidder or contractor or subcontractor, respectively, certifies that it is not barred from contracting with the Department by reason of a violation of either 720 ILCS 5/33E-3 or 720 ILCS 5/33E-4.

   A violation of section 33E-3 would be represented by a conviction of the crime of bid-rigging which, in addition to Class 3 felony sentencing, provides that any person convicted of this offense, or any similar offense of any state or the United States which contains the same elements as this offense shall be barred for 5 years from the date of conviction from contracting with any unit of State or local government. No corporation shall be barred from contracting with any unit of State or local government as a result of a conviction under this Section of any employee or agent of such corporation if the employee so convicted is no longer employed by the corporation: (1) it has been finally adjudicated not guilty or (2) if it demonstrates to the governmental entity with which it seeks to contract that entity finds that the commission of the offense was neither authorized, requested, commanded, nor performed by a director, officer or a high managerial agent on behalf of the corporation.

   A violation of Section 33E-4 would be represented by a conviction of the crime of bid-rotating which, in addition to Class 2 felony sentencing, provides that any person convicted of this offense or any similar offense of any state or the United States which contains the same elements as this offense shall be permanently barred from contracting with any unit of State of Local government. No corporation shall be barred from contracting with any unit of State or Local government as a result of a conviction under this Section of any employee or agent of such corporation if the employee so convicted is no longer employed by the corporation and: (1) it has been finally adjudicated not guilty or (2) if it demonstrates to the governmental entity with which it seeks to contract and that entity finds that the commission of the offense was neither authorized, requested, commanded, nor performed by a director, officer or a high managerial agent on behalf of the corporation.

3. **Bribery.** The bidder or contractor or subcontractor, respectively, certifies that, it has not been convicted of bribery or attempting to bribe an officer or employee of the State of Illinois or any unit of local government, nor has the firm made an admission of guilt of such conduct which is a matter or record, nor has an official, agent, or employee of the firm committed bribery or attempted bribery on behalf of the firm and pursuant to the direction or authorization of a responsible official of the firm.

4. **Interim Suspension or Suspension.** The bidder or contractor or subcontractor, respectively, certifies that it is not currently under a suspension as defined in Subpart I of Title 44 Subtitle A Chapter III Part 6 of the Illinois Administrative code. Furthermore, if suspended prior to completion of this work, the contract or contracts executed for the completion of this work may be canceled.

Local Public Agency	County	Section Number	Route(s) (Street/Road Name)
Kane County Division of Transpo	Kane	26-00176-06-BR	Randall Road over UPRR, CPK

SIGNATURES

(If an individual)

Bidder Signature & Date

Business Address

City | State | Zip Code

(If a partnership)

Firm Name

Signature & Date

Title

Business Address

City | State | Zip Code

Insert the Names and Addresses of all Partners

(If a corporation)

Corporate Name: Herlihy Mid-Continent Company

Signature & Date: , 8/18/26

Title: Douglass D. Schultz, President

Business Address: 1306 Marquette Drive

City: Romeoville | State: IL | Zip Code: 60446

HERLIHY MID-CONTINENT COMPANY CORPORATE SEAL EST. 1929 ILLINOIS

Insert Names of Officers

President: Douglass D. Schultz

Attest:

Secretary

Secretary

John O'Brien

Treasurer

Douglass D. Schultz



Responsible Bidder Checklist KDOT

To be completed by Contractor/Subcontractor

Project: Randall Rd at Claude Hanson Bridge Joint Replacement & Thin Lift Epoxy Overlay **Contract Number:** 26-0017-06-BR

Business Name: Herlihy Mid-Continent Company

Business Address: 1306 Marquette Dr, Romeoville IL 60446

Contact Person: Becky Wright **Phone:** 630-633-2792

Fax: 630-378-1002 **E-mail:** becky@hmcco.net

For Office Use Only

Evidence of prequalification through the Illinois Department of Transportation	Yes [ ] No [ ]
Evidence of (i) participation in applicable registered apprenticeship programs	Yes [ ] No [ ]
and (ii) evidence that each program has met the graduation requirement	Yes [ ] No [ ]
Contractor's verification of compliance with the requirements of Kane County Ordinance No. 23-340.	Yes [ ] No [ ]
Each Sub-Contractor's verification of compliance with the requirements of Kane County Ordinance No. 23-340	Yes [ ] No [ ]

Contract No. _____

RESPONSIBLE BIDDER REPRESENTATIONS

Contractor and all subcontractors shall complete this Responsible Bidder Representations Form ("Form") and submit supporting documentation as required pursuant to Kane County Ordinance No. 23-340. Contractor must submit this Form and all supporting documentation with its bid. Contractor shall be responsible for providing this Form to all subcontractors who will perform work on the project. All subcontractors' Forms and supporting documentation must be submitted to the Kane County Division of Transportation (KDOT) prior to commencing work on the project. Failure to comply with all submission requirements set forth in Kane County Ordinance No. 23-340 is grounds for KDOT to determine that a submission is incomplete, which may result in a determination that Contractor is not a responsible bidder.

For the remainder of this Form, "Contractor" refers to the general contractor and all subcontractors. Each item must be answered. If the question is not applicable, answer "NA." If the answer is none, answer "none."

The certifications set forth in this Form and all documents attached hereto shall become a part of any contract awarded to the Contractor. Furthermore, Contractor shall comply with these certifications during the term and/or performance of the contract.

The undersigned Douglass D. Schultz (Name), as President (Title) and on behalf of Herlihy Mid-Continent Company (Contractor) certifies that:

Illinois Department of Transportation Prequalification

Contractor has met all of the conditions required for prequalification as a potential bidder as set forth by the Illinois Department of Transportation — Yes [X] No [ ]

Registered Apprenticeship Programs

Contractor participates in apprenticeship training programs approved by and registered with the United States Department of Labor applicable to each trade it will perform on the project: — Yes [X] No [ ]

Each program meets the requirement that a program has graduated at least five (5) apprentices in each of the past five (5) years: — Yes [X] No [ ]

Subcontractors

Contractor has or will disclose the name and address of each subcontractor for whom the contractor has accepted a bid and/or intends to hire on any part of the project (Form A): Yes [X] No [ ]

Contractor has or will provide a Form to all of the above-referenced subcontractors: Yes [X]No [ ]

Table A

Subcontractors who are anticipated to perform work on the Project

Name	Address	Work to be Performed
To be determined at time of award		

Documentation Attached (Contractor must initial next to each item):

Table A: Name and address of subcontractors from whom Contractor has accepted a bid or intends to hire to perform work on any part of the project.
NOTE: All subcontractors shall complete and submit an Affidavit of Compliance no later than the date the subcontractor commences work on the project.

Evidence of Prequalification through the Illinois Department of Transportation

Evidence of participation is applicable registered apprenticeship programs

Evidence that each apprenticeship program meets RBO graduation requirement

CONTRACTOR VERIFICATION

I certify that I am authorized to execute this Contractor Verification on behalf of the Contractor set forth on page one (1), that I have personal knowledge of all the information set forth herein, and that all statements, representations, information and documents provided in or with this Form and attachments hereto are true and accurate and are submitted in compliance with the requirements of Kane County Ordinance No. 23-340. Failure to comply with all submission requirements set forth in Kane County Ordinance No. 23-340 is grounds for the County of Kane to determine that a submission is incomplete, which may result in a determination that Contractor is not a responsible bidder.

The Contractor shall report any change in any of the facts stated in this Form within fourteen (14) days of the effective date of such change by completing and submitting a new Form. Failure to comply with this requirement is grounds for the Contractor to be deemed a non-responsible bidder.

HERLIHY MID-CONTINENT COMPANY CORPORATE SEAL EST. 1929 ILLINOIS

Signature of Authorized Officer

Douglass D. Schultz
Name of Authorized Officer (Print or Type)

President
Title

630-378-1000
Telephone Number

Subscribed and sworn to
before me this 18 day of
August, 2026.

Notary Public Signature & Seal

"OFFICIAL SEAL"
Rebecca A. Wright
NOTARY PUBLIC, STATE OF ILLINOIS
My Commission Expires 10-21-26

SUBCONTRACTOR VERIFICATION

I certify that I am authorized to execute this Subcontractor Verification on behalf of the Subcontractor set forth on page one (1), that I have personal knowledge of all the information set forth herein and that all statements, representations, information and documents provided in or with this Form and attachments hereto are true and accurate and are submitted in compliance with the requirements of Kane County Ordinance No. 23-340.

The Subcontractor shall report any change in any of the facts stated in this Form within fourteen (14) days of the effective date of such change by completing and submitting a new Affidavit. Failure to comply with this requirement is grounds for the project owner to withhold payment due for work performed.

To be completed at time of award

_____
Signature of Authorized Officer

_____
Name of Authorized Officer (Print or Type)

_____
Title

_____
Telephone Number

_____
Company Name

Subscribed and sworn to
before me this _____ day of
_____, 20__.

_____
Notary Public Signature & Seal

Contract No. _____

PROPOSAL

HERLIHY
MID-CONTINENT CO.

Herlihy Mid Continent Company

1306 Marquette Drive
Romeoville IL 60446
Contact:
Phone: **630-378-1000**
Fax: **630-378-1002**

Quote To:

Phone:
Fax:
Contact:

Proposal Date: 8/18/2026
Owner: Kane County
Job Name: Hanson Bridge (SN 045-3115)
FAP ROUTE 336/Randall Road
over Tyler Creek,UPRR,CPKC and IC&I

Bid Date: 8/18/2026

ITEM	DESCRIPTION	QUANTITY	UNIT	UNIT PRICE	AMOUNT
50102400	CONCRETE REMOVAL	12.60	CY	2,240.00	28,224.00
50300255	CONCRETE SUPERSTRUCTURE	12.60	CY	1,530.00	19,278.00
50300300	PROTECTIVE COAT	17.30	SY	7.00	121.10
50800205	REINFORCEMENT BARS, EPOXY CTD	1,730.00	LB	9.00	15,570.00
50800515	BAR SPLICERS	28.00	EA	100.00	2,800.00
52000110	PREFORMED JOINT STRIP SEAL	140.00	FT	219.00	30,660.00
67100100	MOBILIZATION	1.00	LS	61,491.50	61,491.50
70100310	TC&P (SPECIAL)	1.00	LS	145,000.00	145,000.00
70107025	CHANGEABLE MESSAGE SIGN	60.00	CD	35.00	2,100.00
78009004	MOD URETHANE PVT MKG - 4"	4,986.00	FT	0.95	4,736.70
78009005	MOD URETHANE PVT MKG- 6"	624.00	FT	1.75	1,092.00
X0326806	WASHOUT BASIN	1.00	LS	1,800.00	1,800.00
Z0012102	BRIDGE DK. SCARIFICATION 3/8"	9,035.00	SY	7.00	63,245.00
Z0012193	BRIDGE DK. THIN POLY. OVRLY, 3/8	9,035.00	SY	58.62	529,631.70
Z0012754	STR REP CONC DP =<5"	250.00	SF	145.00	36,250.00
Z0016001	DECK SLAB REPAIR FD-T1	100.00	SY	800.00	80,000.00
GRAND TOTAL					**$1,022,000.00**

Illinois Department of Transportation

Schedule of Prices

Contractor's Name: Herlihy Mid-Continent Company

Contractor's Address: 1306 Marquette Drive | City: Romeoville | State: IL | Zip Code: 60446

Local Public Agency: Kane County Division of Transportation | County: Kane | Section Number: 26-00176-06-BR

Route(s) (Street/Road Name): Randall Road (SN 045-3115)

Schedule for Multiple Bids

Combination Letter	Section Included in Combinations	Total

Schedule for Single Bid

(For complete information covering these items, see plans and specifications.)

Item Number	Items	Unit	Quantity	Unit Price	Total
50102400	Concrete Removal	Cu. Yd.	12.6		
50300255	Concrete Superstructure	Sq. Yd.	12.6		
50300300	Protective Coat	Sq. Yd.	17.3		
50800205	Reinforcement Bars, Epoxy Co	Pound	1,730		
50800515	Bar Splicers	Each	28		
52000110	Preformed Joint Strip Seal	Foot	140		
67100100	Mobilization	L. Sum	1		
70100310	TC&P (Special)	L. Sum	1		
70107025	Changeable Message Sign	Cal. Day	60		
78009004	Mod Urethane Pavt Mkg - 4"	Foot	4,986		
78009005	Mod Urethane Pavt Mkg - 6"	Foot	624		
X0326806	Washout Basin	L. Sum	1		
Z0012102	Bridge Dk. Scarification 3/8"	Sq. Yd.	9,035		
~~Z0012193~~	~~Bridge Dk. Thin Poly. Ovrly, 3/8~~	~~Sq. Yd.~~	~~9,035~~		
Z0012754	Str Rep Conc DP =< 5"	Sq. Ft.	250		
Z0016001	Deck Slab Repair (FD-T1)	Sq. Yd.	100		
				Bidder's Total Proposal	

ADDENDUM

1. Each pay item should have a unit price and a total price.
2. If no total price is shown or if there is a discrepancy between the product of the unit price multiplied by the quantity, the unit price shall govern.
3. If a unit price is omitted, the total price will be divided by the quantity in order to establish a unit price.
4. A bid may be declared unacceptable if neither a unit price or total price is shown.

Note: Instructions should not be included when the form is submit.

This form is used when a Local Public Agency desires to solicit bids for a project.

This form shall be included in all formal contract proposals for bidding purposes. This includes both maintenance and construction projects. Refer to Chapter 12 of the Bureau of Local Roads and Streets Manual for more information. Specifications must be included in the proposal packet, along with plans. For signature requirements refer to Chapter 2, Section 3.05(b) of the BLRS Manual.

Proposal Submitted By:

Contractor's Name (to be completed by Bidder)	Contractor will insert their name when submitting a proposal packet for bid.
Contractor's Address (to be completed by Bidder)	Contractor will insert legal address when submitting a proposal packet for bid.
Local Public Agency	Insert the name of the Local Public Agency (LPA) soliciting bids for the project.
County	Insert the name of the County in which the LPA is located.
Section Number	Insert the section number assigned to this project without dashes.
Route(s) (Street/Road Name)	Insert the name of the street or route on which the project is located. For projects that include several streets or routes, insert various.
Schedule for Multiple Bids	
Combination Letter	Insert the letter identifying the combination bids.
Schedule Included in Combinations	Insert the schedules of the bids included in the combination.
Total	Insert the total amount of the combination bid for the sections listed to the left.
Button Functionality 	Use the Add Row (+) and/or Remove Row (-) buttons located at the beginning of each line/row to either add a row directly below the row that the Add (+) button is clicked on or remove the actual row that the Remove (-) button is clicked on.
Schedule for Single Bid	
Item No.	Insert the item number of the item being bid.
Item(s)	Insert the name of the item being bid.
Delivery	Insert the delivery type for the item listed to the left.
Unit	Insert the unit of measure for the item listed to the left.
Quantity	Insert the quantity for the item listed to the left.
Unit Price	The bidder shall insert the unit price for the item listed to the left.
Total	The bidder shall insert the total, which is quantity times the unit price. If the form is being filled out electronically, this field will automatically calculate the total.
Button Functionality 	Use the Add Row (+) and/or Remove Row (-) buttons located at the beginning of each line/row to either add a row directly below the row that the Add (+) button is clicked on or remove the actual row that the Remove (-) button is clicked on.
Bidder's Total Proposal	If completing electronically, this will be automatically completed. If completing by hand, insert the sum of all items above.

Distribution

This form is to be inserted into a formal contract proposal, distribution will be the same as the proposal. When the bidder submits their bid, this form must be completed and included.

ADDENDUM

Illinois Department of Transportation

Apprenticeship and Training Program Certification

Local Public Agency	County	Street Name/Road Name	Section Number
Kane County DOT	Kane	Randall Road	26-00176-06-BR

All contractors are required to complete the following certification

☑ For this contract proposal or for all bidding groups in this deliver and install proposal.

☐ For the following deliver and install bidding groups in this material proposal.

Illinois Department of Transportation policy, adopted in accordance with the provisions of the Illinois Highway Code, requires this contract to be awarded to the lowest responsive and responsible bidder. The award decision is subject to approval by the Department. In addition to all other responsibility factors, this contract or deliver and install proposal requires all bidders and all bidder's subcontractors to disclose participation in apprenticeship or training programs that are (1) approved by and registered with the United States Department of Labor's Bureau of Apprenticeship and Training, and (2) applicable to the work of the above indicated proposals or groups. Therefore, all bidders are required to complete the following certification:

1. Except as provided in paragraph 4 below, the undersigned bidder certifies that it is a participant, either as an individual or as part of a group program, in an approved apprenticeship or training program applicable to each type of work or craft that the bidder will perform with its own employees.

2. The undersigned bidder further certifies, for work to be performed by subcontract, that each of its subcontractors either (A) is, at the time of such bid, participating in an approved, applicable apprenticeship or training program; or (B) will, prior to commencement of performance of work pursuant to this contract, establish participation in an approved apprenticeship or training program applicable to the work of the subcontract.

3. The undersigned bidder, by inclusion in the list in the space below, certifies the official name of each program sponsor holding the Certificate of Registration for all of the types of work or crafts in which the bidder is a participant and that will be performed with the bidder's employees. Types of work or craft that will be subcontracted shall be included and listed as subcontract work. The list shall also indicate any type of work or craft job category for which there is no applicable apprenticeship or training program available.

Apprenticeship Programs - Ironworkers Local 1, Bricklayers Dist. Council 1, Chicago & Northeast IL Dist. Council of Carpenters, Cement Masons Local 502 & 803, Chicagoland Laborers & Operating Eng. Local 150

4. Except for any work identified above, if any bidder or subcontractor shall perform all or part of the work of the contract or deliver and install proposal solely by individual owners, partners or members and not by employees to whom the payment of prevailing rates of wages would be required, check the following box, and identify the owner/operator workforces and positions of ownership. ☐

The requirements of this certification and disclosure are a material part of the contract, and the contractor shall require this certification provision to be included in all approved subcontracts. The bidder is responsible for making a complete report and shall make certain that each type of work or craft job category that will be utilized on the project is accounted for and listed. The Department at any time before or afterward may require the production of a copy of each applicable Certificate of Registration issued by the United States Department of Labor evidencing such participation by the contractor and any or all of its subcontractors. In order to fulfill the participation requirement, it shall not be necessary that any applicable program sponsor be currently taking or that it will take applications for apprenticeship, training or employment during the performance of the work of this contract or deliver and install proposal.

HERLIHY MID-CONTINENT COMPANY CORPORATE SEAL EST. 1929 ILLINOIS

Bidder	Signature & Date
Herlihy Mid-Continent Company	, 8/18/26
Title	
Douglass D. Schultz, President	

Address	City	State	Zip Code
1306 Marquette Drive	Romeoville	IL	60446

The United States Department of Labor

Office of Apprenticeship

Certificate of Registration of Apprenticeship Program

Iron Workers Local #393 JATC

Aurora, Illinois

For the Trade - IRONWORKER

Registered as part of the National Apprenticeship System
in accordance with the basic standards of apprenticeship
established by the Secretary of Labor

Registered - September 30, 1952

Date

Revised - May 28, 2021

Registration No. *IL004780102*



Administrator, Office of Apprenticeship

The United States Department of Labor

Office of Apprenticeship Training, Employer and Labor Services

Bureau of Apprenticeship and Training

Certificate of Registration

Illinois District Council #1 Bricklayers D.C.T.C.
Addison, Illinois
For the Trades of Bricklayer, Plasterer, Tuckpointer-Cleaner-Caulker, Cement Mason, Marble Setter and Stonemason

Registered as part of the National Apprenticeship Program in accordance with the basic standards of apprenticeship established by the Secretary of Labor

May 30, 2003
Date

IL015030003
Registration No.

DEPARTMENT OF LABOR · UNITED STATES OF AMERICA ·

Secretary of Labor

Administrator, Apprenticeship Training, Employer and Labor Services

The United States Department of Labor

Office of Apprenticeship Training, Employer and Labor Services

Bureau of Apprenticeship and Training

Certificate of Registration

Chgo. & N.E. IL. Dist. Council of Carpenters App. & Trng. Prgm.
Elk Grove Village, Illinois
For the Trade - Form Builder (Construction)

Registered as part of the National Apprenticeship Program
in accordance with the basic standards of apprenticeship
established by the Secretary of Labor

February 4, 2003
Date

IL017030001
Registration No.

Secretary of Labor

Administrator, Apprenticeship Training, Employer and Labor Services

The United States Department of Labor

Bureau of Apprenticeship and Training
Certificate of Registration

CEMENT MASONS' AREA JOINT APPRENTICESHIP & CEMENT MASONS UNION LOC. NO. 502
BELLWOOD, ILLINOIS

FOR THE TRADE OF: CEMENT MASON

Registered as part of the National Apprenticeship Program in accordance with the basic standards of apprenticeship established by the Secretary of Labor

REGISTERED: OCTOBER 17, 1945
REVISED: DECEMBER 29, 1988
Date

008-0816
Registration No.

Ann McLaughlin
Secretary of Labor

James D Van Erden
Director, Bureau of Apprenticeship and Training

The United States Department of Labor

Bureau of Apprenticeship and Training
Certificate of Registration

DU PAGE COUNTY CEMENT MASONS' LOCAL #803 JOINT APPRENTICESHIP COMMITTEE
VILLA PARK, ILLINOIS

FOR THE TRADE OF: CEMENT MASON

Registered as part of the National Apprenticeship Program in accordance with the basic standards of apprenticeship established by the Secretary of Labor

Ann McLaughlin

Secretary of Labor

James D Van Erden

OCTOBER 12, 1955
Date
REVISED: FEBRUARY 10, 1989

015-0492

The United States Department of Labor

Bureau of Apprenticeship and Training

Certificate of Registration

Chicagoland Laborers' Training & Apprenticeship Program

For the Trade of Construction Craft Laborer

Registered as part of the National Apprenticeship Program
in accordance with the basic standards of apprenticeship
established by the Secretary of Labor

April 12, 1999

Date

IL017-0602

Registration No.

DOT # 869-463-580

Secretary of Labor

Director, Bureau of Apprenticeship and Training

DOT SYMBOL OA61

The United States Department of Labor

Office of Apprenticeship Training, Employer and Labor Services

Bureau of Apprenticeship and Training

Certificate of Registration

Operating Engineers Local #150
Plainfield, Illinois
For the Trade of Operating Engineer
Registered as part of the National Apprenticeship Program
in accordance with the basic standards of apprenticeship
established by the Secretary of Labor

November 6, 2002
Date

IL 0087801 73
Registration No.

Secretary of Labor

Administrator, Apprenticeship Training, Employer and Labor Services

Illinois Department of Transportation

Affidavit of Illinois Business Office

Local Public Agency	County	Street Name/Road Name	Section Number
Kane County DOT	Kane	Randall Road	26-00176-06-BR

I, Douglass D. Schultz (Name of Affiant) of Naperville (City of Affiant), Illinois (State of Affiant),
being first duly sworn upon oath, state as follows:

1. That I am the President (Officer or Position) of Herlihy Mid-Continent Company (Bidder).
2. That I have personal knowledge of the facts herein stated.
3. That, if selected under the proposal described above, Herlihy Mid-Continent Company (Bidder), will maintain a business office in the State of Illinois, which will be located in Will (County) County, Illinois.
4. That this business office will serve as the primary place of employment for any persons employed in the construction contemplated by this proposal.
5. That this Affidavit is given as a requirement of state law as provided in Section 30-22(8) of the Illinois Procurement Code.

HERLIHY MID-CONTINENT COMPANY CORPORATE SEAL EST. 1929 ILLINOIS

Signature & Date

, 8/18/26

Print Name of Affiant

Douglass D. Schultz, President

Notary Public

State of IL

County Will

Signed (or subscribed or attested) before me on August 18, 2026 (date) by

Douglass D. Schultz (name/s of person/s), authorized agent(s) of

Herlihy Mid-Continent Company (Bidder).

"OFFICIAL SEAL"
Rebecca A. Wright
NOTARY PUBLIC, STATE OF ILLINOIS
My Commission Expires 10-21-26

(SEAL)

Notary Public Signature & Date

, 8/18/26

My commission expires 10/21/26

Illinois Department of Transportation

Substance Abuse Prevention Program Certification

Contract Number	District	Letting Date
		8/18/26

Route	County
Randall Road	Kane

Project Number	Job Number

Section Number: 26-00176-06-BR

The Substance Abuse Prevention on Public Works Act, Public Act 95-0635, prohibits the use of drugs and alcohol, as defined in the Act, by employees of the Contractor and by employees of all approved Subcontractors while performing work on a public works project. The Contractor/Subcontractor herewith certifies that it has a superseding collective bargaining agreement or makes the public filing of its written substance abuse prevention program for the prevention of substance abuse among its employees who are not covered by a collective bargaining agreement dealing with the subject as mandated by the Act.

A. The undersigned representative of the Contractor/Subcontractor certifies that the contracting entity has signed collective bargaining agreements that are in effect for all of its employees, and that deal with the subject matter of Public Act 95-0635.

Contractor/Subcontractor: Herlihy Mid-Continent Company

Name of Authorized Representative (type or print): Douglass D. Schultz

Title of Authorized Representative (type or print): President

Signature of Authorized Representative

Date: 8/18/26

HERLIHY MID-CONTINENT COMPANY CORPORATE SEAL EST. 1929 ILLINOIS

B. The undersigned representative of the Contractor/Subcontractor certifies that the contracting entity has in place for all of its employees not covered by a collective bargaining agreement that deals with the subject of the Act, the attached substance abuse prevention program that meets or exceeds the requirements of Public Act 95-0635.

Contractor/Subcontractor

Name of Authorized Representative (type or print)

Title of Authorized Representative (type or print)

Signature of Authorized Representative

Date

Return With Bid

OPTION FOR
STEEL COST ADJUSTMENT

The bidder shall submit this completed form with his/her bid. Failure to submit the form or properly complete contract number, company name, and sign and date the form shall make this contract exempt of steel cost adjustments for all items of steel. Failure to indicate "Yes" for any item of work will make that item of steel exempt from steel cost adjustment. After award, this form, when submitted shall become part of the contract.

Contract No.: 26-0017-06-BR

Company Name: Herlihy Mid-Continent Company

Contractor's Option:

Is your company opting to include this special provision as part of the contract plans for the following items of work?

Metal Piling	Yes	☐
Structural Steel	Yes	☐
Reinforcing Steel	Yes	☐
Dowel Bars, Tie Bars and Mesh Reinforcement	Yes	☐
Guardrail	Yes	☐
Steel Traffic Signal and Light Poles, Towers and Mast Arms	Yes	☐
Metal Railings (excluding wire fence)	Yes	☐
Frames and Grates	Yes	☐

Signature: _____ **Date:** 8/18/26

Douglass D. Schultz, President

HERLIHY MID-CONTINENT COMPANY CORPORATE SEAL EST. 1929 ILLINOIS

Return With Bid

OPTION FOR FUEL COST ADJUSTMENT

The bidder shall submit this completed form with his/her bid. Failure to submit the form or properly complete contract number, company name, and sign and date the form shall make this contract exempt of fuel cost adjustments in all categories. Failure to indicate "Yes" for any category of work at the time of bid will make that category of work exempt from fuel cost adjustment. After award, this form, when submitted shall become part of the contract.

Contract No.: 26-0017-06-BR

Company Name: Herlihy Mid-Continent Company

Contractor's Option:

Is your company opting to include this special provision as part of the contract plans for the following categories of work?

Category A	Earthwork.	Yes ☐
Category B	Subbases and Aggregate Base Courses	Yes ☐
Category C	HMA Bases, Pavements and Shoulders	Yes ☐
Category D	PCC Bases, Pavements and Shoulders	Yes ☐
Category E	Structures	Yes ☐

Signature: _____ **Date:** 8/18/26

Douglass D. Schultz, President

HERLIHY MID-CONTINENT COMPANY CORPORATE SEAL EST. 1929 ILLINOIS

Code	Description	UOM	Comment	Price	Quantity	Total Cost
50102400	CONCRETE REMOVAL	Cubic Yard		2,240.00	12.6	28,224.00
50300255	CONCRETE SUPERSTRUCTURE	Square Yard		1,530.00	12.6	19,278.00
50300300	PROTECTIVE COAT	Square Yard		7	17.3	121.1
50800205	REINFORCEMENT BARS, EPOXY CO	Pound		9	1,730.00	15,570.00
50800515	BAR SPLICERS	Each		100	28	2,800.00
52000110	PREFORMED JOINT STRIP SEAL	Foot/Feet		219	140	30,660.00
67100100	MOBILIZATION	Lump-Sum		61,491.50	1	61,491.50
70100310	TC&P (SPECIAL)	Lump-Sum		145,000.00	1	145,000.00
70104025	CHANGEABLE MESSAGE SIGN	Calendar Day		35	60	2,100.00
78009004	MOD URETHANE PAVT MKG - 4"	Foot/Feet		0.95	4,986.00	4,736.70
78009005	MOD URETHANE PAVT MKG - 6"	Foot/Feet		1.75	624	1,092.00
X0326806	WASHOUT BASIN	Lump-Sum		1,800.00	1	1,800.00
Z00123102	BRIDGE DK. SCARIFICATION 3/8"	Square Yard		7	9,035.00	63,245.00
Z0012193	BRIDGE DK. THIN POLY. OVERLY, 3/8"	Square Yard		58.62	9,035.00	529,631.70
Z0012754	STR REP CONC DP =<5"	Square Foot/Feet		145	250	36,250.00
Z0016001	DECK SLAB REPAIR (FD-T1)	Square Yard		800	100	80,000.00

Bond # 30275005

Illinois Department of Transportation

Contract Bond

Local Public Agency	County	Street Name/Road Name	Section Number
County of Kane	Kane	Randall Road	26-00176-06-BR

Bond information to be returned to Local Public Agency at 41W011 Burlington Road St. Charles, Illinois 60175
Complete Address

We, Herlihy Mid-Continent Company, 1306 Marquette Drive, Romeoville, Illinois 60008
Contractor's Name and Address

a/an Individual organized under the laws of the State of Illinois as PRINCIPAL, and
State

Continental Casualty Company 151 N. Franklin Street Chicago, IL. 60606
Surety Name and Address

as SURETY, are held and firmly bound unto the above Local Public Agency (thereafter referred to as "LPA") in the penal sum of

One Million Twenty Two Thousand Dollars

Dollars ($1,022,000.00) lawful money of the United States, to be paid to said LPA, the payment of which we bind ourselves, successors and assigns jointly to pay to the LPA this sum under the conditions of this instrument.

WHEREAS, THE CONDITION OF THE FOREGOING OBLIGATION IS SUCH that the said Principal has entered into a written contract with the LPA acting through its awarding authority for the construction of work on the above sections, which contract is hereby referred to and made a part hereof, as if written herein at length, and whereby the said Principal has promised and agreed to perform said work in accordance with the terms of said contract, and has promised to pay all sums of money due for any labor, materials, apparatus, fixtures or machinery furnished to such Principal for the purpose of performing such work and has further agreed to pay all direct and indirect damages to any person, firm, company or corporation to whom any money may be due from the Principal, subcontractor or otherwise for any such labor, materials, apparatus, fixtures or machinery so furnished and that suit may be maintained on such bond by any such person, firm, company or corporation for the recovery of any such money.

NOW, THEREFORE, if the said Principal shall perform said work in accordance with the terms of said contract, and shall pay all sums of money due or to become due for any labor, materials, apparatus, fixtures or machinery furnished to it for the purpose of constructing such work, and shall commence and complete the work within the time prescribed in said contract, and shall pay and discharge all damages, direct and indirect, that may be suffered or sustained on account of such work during the time of the performance thereof and until the said work shall have been accepted, and shall hold the LPA and its awarding authority harmless on account of any such damages and shall in all respects fully and faithfully comply with all the provisions, conditions and requirements of said contract, then this obligation shall be void; otherwise it shall remain in full force and effect.

IN TESTIMONY WHEREOF, the said PRINCIPAL and the said SURETY have caused this instrument to be signed by their respective agents this 13th Day of October 2026
Day Month and Year

HERLIHY MID-CONTINENT COMPANY CORPORATE SEAL EST 1929 ILLINOIS

PRINCIPAL

Company Name		Company Name	
Herlihy Mid-Continent Company			
By Signature & Title	Date	By Signature & Title	Date
Douglass D. Schultz President	10-13-2026		
Attest Signature & Title	Date	Attest Signature & Title	Date
John O'Brien, Secretary	10-13-26		

(If PRINCIPAL is a joint venture of two or more contractors, the company names and authorized signature of each contractor must be affixed.)

STATE OF IL

COUNTY OF ~~KANE~~ WILL

I, Rebecca A. Wright, a Notary Public in and for said county, do hereby certify that
Notary Name

Douglass D. Schultz & John O'Brien
Insert name of Individuals signing on behalf of PRINCIPAL

who is/are each personally known to me to be the same person(s) whose name(s) is/are subscribed to the foregoing instrument on behalf of PRINCIPAL, appeared before me this day in person and acknowledged respectively, that he/she/they signed and delivered said instrument freely and voluntarily for the uses and purposes therein set forth.

Given under my hand and notarial seal this 13th (Day) day of October 2026 (Month, Year).

(SEAL)

"OFFICIAL SEAL"
Rebecca A. Wright
NOTARY PUBLIC, STATE OF ILLINOIS
My Commission Expires 10-21-26

Notary Public Signature

Date commission expires 10/21/26

SURETY

Name of Surety: Continental Casualty Company

Title

By: Ann Marie Waters

Ann Marie Waters Attorney in Fact

STATE OF IL

COUNTY OF Kane

I, Christine Michelle Mazzei, a Notary Public in and for said county, do hereby certify that
Notary Name

(SEE ATTACHED NOTARY)
Insert name of Individuals signing on behalf of SURETY

who is/are each personally known to me to be the same person(s) whose name(s) is/are subscribed to the foregoing instrument on behalf of SURETY, appeared before me this day in person and acknowledged respectively, that he/she/they signed and delivered said instrument freely and voluntarily for the uses and purposes therein set forth.

Given under my hand and notarial seal this 19th (Day) day of October 2026 (Month, Year).

(SEAL)

OFFICIAL SEAL
CHRISTINE MICHELLE MAZZEI
NOTARY PUBLIC, STATE OF ILLINOIS
COMMISSION NO. 1020829
MY COMMISSION EXPIRES NOVEMBER 14, 2029

Notary Public Signature

Date commission expires 11/14/2029

Approved this 13th (Day) day of October 2026 (Month, Year).

Attest:

Local Public Agency Clerk Signature

Date: 10/19/26

County
Local Public Agency Type

Clerk

Awarding Authority: Madam Chair - County of Kane

Awarding Authority Signature

Date: 10/15/26

STATE OF ILLINOIS

COUNTY OF DuPAGE

I, DeAnne Marie Pehlke Notary Public of Will County, in the State of Illinois, do hereby certify that Ann Marie Waters Attorney-in-Fact, of the Continental Casualty Company who is personally known to me to be the same person whose name is subscribed to the foregoing instrument, appeared before me this day in person, and acknowledged that she signed, sealed and delivered said instrument, for and on behalf of the Continental Casualty Company the used and purposes therein set forth.

Given under my hand and notarial seal at my office in the Village of Naperville in said County, this 13th day of October 2026

DeAnne Marie Pehlke
(Notary Public)
DeAnne Marie Pehlke
My Commission expires: 11/7/2027
Notary Seal:

"OFFICIAL SEAL"
DEANNE MARIE PEHLKE
NOTARY PUBLIC, STATE OF ILLINOIS
COMMISSION NO. 980957
MY COMMISSION EXPIRES 11/7/2027

POWER OF ATTORNEY APPOINTING INDIVIDUAL ATTORNEY-IN-FACT

Know All Men By These Presents, That Continental Casualty Company, an Illinois insurance company, National Fire Insurance Company of Hartford, an Illinois insurance company, and American Casualty Company of Reading, Pennsylvania, a Pennsylvania insurance company (herein called "the CNA Companies"), are duly organized and existing insurance companies having their principal offices in the City of Chicago, and State of Illinois, and that they do by virtue of the signatures and seals herein affixed hereby make, constitute and appoint

William Cahill, Kimberly Sawicki, Kimberly R Holmes, Ann Marie Waters, Brent R Wagner, Rachel E Hernandez, Richard A Freebourn Jr, Individually

of Naperville, IL, their true and lawful Attorney(s)-in-Fact with full power and authority hereby conferred to sign, seal and execute for and on their behalf bonds, undertakings and other obligatory instruments of similar nature

- In Unlimited Amounts -

and to bind them thereby as fully and to the same extent as if such instruments were signed by a duly authorized officer of their insurance companies and all the acts of said Attorney, pursuant to the authority hereby given is hereby ratified and confirmed.

This Power of Attorney is made and executed pursuant to and by authority of the By-Laws and Resolutions, printed below, duly adopted, as indicated, by the Boards of Directors of the insurance companies.

In Witness Whereof, the CNA Companies have caused these presents to be signed by their Vice President and their corporate seals to be hereto affixed on this 23rd day of March, 2026.

Continental Casualty Company
National Fire Insurance Company of Hartford
American Casualty Company of Reading, Pennsylvania

Larry Kasten — Vice President

State of South Dakota, County of Minnehaha, ss:

On this 23rd day of March, 2026, before me personally came Larry Kasten to me known, who, being by me duly sworn, did depose and say: that he resides in the City of Sioux Falls, State of South Dakota; that he is a Vice President of Continental Casualty Company, an Illinois insurance company, National Fire Insurance Company of Hartford, an Illinois insurance company, and American Casualty Company of Reading, Pennsylvania, a Pennsylvania insurance company described in and which executed the above instrument; that he knows the seals of said insurance companies; that the seals affixed to the said instrument are such corporate seals; that they were so affixed pursuant to authority given by the Boards of Directors of said insurance companies and that he signed his name thereto pursuant to like authority, and acknowledges same to be the act and deed of said insurance companies.

My commission expires

December 4, 2031

K. WALSH NOTARY PUBLIC SOUTH DAKOTA

K. Walsh — Notary Public

CERTIFICATE

I, Paula Kolsrud, Assistant Secretary of Continental Casualty Company, an Illinois insurance company, National Fire Insurance Company of Hartford, an Illinois insurance company, and American Casualty Company of Reading, Pennsylvania, a Pennsylvania insurance company do hereby certify that the Power of Attorney herein above set forth is still in force, and further certify that the By-Laws and Resolutions of the Board of Directors of the insurance companies printed below are still in force. In testimony whereof I have hereunto subscribed my name and affixed the seal of the said insurance companies this 13th day of October. 2026

Continental Casualty Company
National Fire Insurance Company of Hartford
American Casualty Company of Reading, Pennsylvania

Paula Kolsrud — Assistant Secretary

Authorizing By-Laws and Resolutions

ADOPTED BY THE BOARD OF DIRECTORS OF EACH OF CONTINENTAL CASUALTY COMPANY, NATIONAL FIRE INSURANCE COMPANY OF HARTFORD, and AMERICAN CASUALTY COMPANY OF READING, PENNSYLVANIA (as defined above, the "CNA Companies"):

This Power of Attorney is made and executed pursuant to and by authority of the following resolution duly adopted by the Board of Directors of each of the above CNA Companies at a meeting held on May 12, 1995:

"RESOLVED: That any Senior or Group Vice President may authorize an officer to sign specific documents, agreements and instruments on behalf of the Company provided that the name of such authorized officer and a description of the documents, agreements or instruments that such officer may sign will be provided in writing by the Senior or Group Vice President to the Secretary of the Company prior to such execution becoming effective."

This Power of Attorney is signed by Larry Kasten, Vice President, who has been authorized pursuant to the above resolution to execute power of attorneys on behalf of each of the CNA Companies.

This Power of Attorney is signed and sealed by facsimile under and by the authority of the following Resolution adopted by the Board of Directors of each of the above Companies by unanimous written consent dated the 25th day of April, 2012:

"Whereas, the bylaws of the Company or specific resolution of the Board of Directors has authorized various officers (the "Authorized Officers") to execute various policies, bonds, undertakings and other obligatory instruments of like nature; and

Whereas, from time to time, the signature of the Authorized Officers, in addition to being provided in original, hard copy format, may be provided via facsimile or otherwise in an electronic format (collectively, "Electronic Signatures"); Now therefore be it resolved: that the Electronic Signature of any Authorized Officer shall be valid and binding on the Company."

This Power of Attorney may be signed by digital signature and sealed by a digital or otherwise electronic-formatted corporate seal under and by the authority of the following Resolution adopted by the Board of Directors of each of the above CNA Companies by unanimous written consent dated the 27th day of April, 2022:

"RESOLVED: That it is in the best interest of the Company to periodically ratify and confirm any corporate documents signed by digital signatures and to ratify and confirm the use of a digital or otherwise electronic-formatted corporate seal, each to be considered the act and deed of the Company."

Go to www.cnasurety.com > Owner / Obligee Services > Validate Bond Coverage, if you want to verify bond authenticity.